Appropriate Technology for Water Supply and Sanitation

A Sanitation Field Manual

by John M. Kalbermatten, DeAnne S. Julius,
and Charles G. Gunnerson

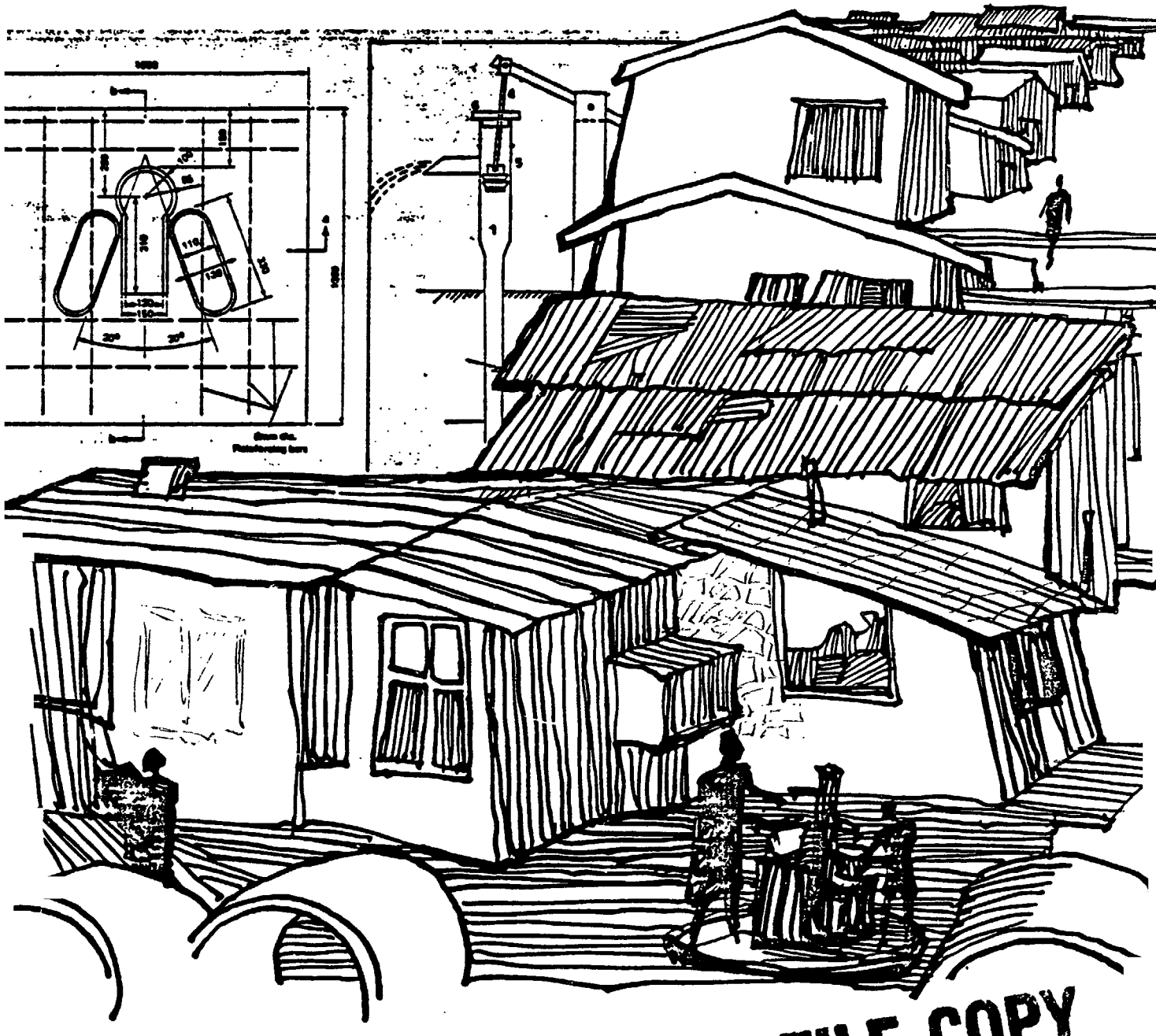

World Bank/December 1980
A Contribution to the International Drinking Water Supply and Sanitation Decade

12/80

Volume 11

APPROPRIATE TECHNOLOGY FOR WATER SUPPLY AND SANITATION

SANITATION FIELD MANUAL

The work reported herein represents the views of the authors and not necessarily those of the World Bank, nor does the Bank accept responsibility for its accuracy or completeness.

Transportation, Water and Telecommunications Department

The World Bank

December 1980

TABLE OF CONTENTS

		Page No.
PREFACE		i
1.	Introduction	1
2.	Sanitation Technology Selection	9
3.	Latrine and Toilet Superstructures	17
4.	Latrine and Toilet Fixtures	21
5.	Ventilated Improved Pit Latrines	31
6.	Composting Toilets	45
7.	Pour-flush Toilets	53
8.	Aquaprivies	61
9.	Septic Tanks, Soakaways, and Drainfields	71
10.	Communal Sanitation Facilities	83

ACRONYMS USED IN THIS REPORT

AIC	-	Average incremental cost
BARC	-	Beltsville Agricultural Research Center (U.S. Department of Agriculture, Beltsville, Maryland, USA)
BOD	-	Biochemical oxygen demand
BOD_5	-	BOD by the standard test
DVC	-	Double-vault composting (as in "DVC toilets")
gcd	-	Grams per capita daily
lcd	-	Liters per capita daily
PF	-	Pour-flush (as in "PF toilets")
PVC	-	Polyvinyl chloride
ROEC	-	Reed Odorless Earth Closet
VIDP	-	Ventilated improved double-pit (as in "VIDP latrines")
VIP	-	Ventilated improved pit (as in "VIP latrines")

PREFACE

In 1976 the World Bank undertook a research project on appropriate technology for water supply and waste disposal in developing countries. Emphasis was directed toward sanitation and reclamation technologies, particularly as they are affected by water service levels and by ability and willingness to pay on the part of the project beneficiaries. In addition to the technical and economic factors, assessments were made of environmental, public health, institutional, and social constraints. The findings of the World Bank research project and other parallel research activities in the field of low-cost water supply and sanitation are presented in the series of publications entitled Appropriate Technology for Water Supply and Sanitation, of which this report is volume 11. Other volumes in this series are as follows:

[vol. 1] - Technical and Economic Options, by John M. Kalbermatten, DeAnne S. Julius, and Charles G. Gunnerson [a condensation of Appropriate Sanitation Alternatives: A Technical and Economic Appraisal, forthcoming from Johns Hopkins University Press]

[vol. 1a] - A Summary of Technical and Economic Options

[vol. 2] - A Planner's Guide, by John M. Kalbermatten, DeAnne S. Julius, Charles G. Gunnerson, and D. Duncan Mara [a condensation of Appropriate Sanitation Alternatives: A Planning and Design Manual, forthcoming from Johns Hopkins University Press]

[vol. 3] - Health Aspects of Excreta and Sullage Management--A State-of-the-Art Review, by Richard G. Feachem, David J. Bradley, Hemda Garelick, and D. Duncan Mara [a condensation of Sanitation and Disease: Health Aspects of Excreta and Wastewater Management, forthcoming from Johns Hopkins University Press]

[vol. 4] - Low-Cost Technology Options for Sanitation--A State-of-the-Art Review and Annotated Bibliography, by Witold Rybczynski, Chongrak Polprasert, and Michael McGarry [available, as a joint publication, from the International Development Research Centre, Ottawa, Ontario, Canada]

[vol. 5] - Sociocultural Aspects of Water Supply and Excreta Disposal, by M. Elmendorf and P. Buckles

[vol. 6] - Country Studies in Sanitation Altenatives, by Richard A. Kuhlthau (ed.)

[vol. 7] - Alternative Sanitation Technologies for Urban Areas in Africa, by Richard G. Feachem, D. Duncan Mara, and Kenneth O. Iwugo

[vol. 8] - Seven Case Studies of Rural and Urban Fringe Areas in Latin America, by Mary Elmendorf (ed.)

[vol. 9] - Design of Low-Cost Water Distribution Systems, Section 1 by Donald T. Lauria, Peter J. Kolsky, and Richard N. Middleton; Section 2 by Keith Demke and Donald T. Lauria; and Section 3 by Paul V. Herbert.

[vol. 10] - Night-soil Composting, by Hillel I. Shuval, Charles G. Gunnerson, and DeAnne S. Julius

[vol. 12] - Low-Cost Water Distribution--A Field Manual, by Charles D. Spangler

The more complete, book versions of volumes 1, 2 and 3 are forthcoming -- under the series title "World Bank Studies in Water Supply and Sanitation" -- from the Johns Hopkins University Press (Baltimore and London).

Additional volumes and occasional papers will be published as ongoing research is completed. With the exception of volume 4, all reports may be obtained from the World Bank's Publications Unit.

It is the purpose of this manual to provide early dissemination of research results to field workers, to summarize selected portions of the other publications that are needed for sanitation program planning, and to describe engineering details of alternative sanitation technologies and the means by which they can be upgraded. While the design of water supply systems is not discussed, information on water service levels corresponding to sanitation options is included because water use is a determinant of wastewater disposal requirements. The guidelines, procedures, and technologies contained in this volume are based upon World Bank studies in nineteen developing and industrial countries where local specialists conducted or contributed to the research. Both the research and its application continue to be evolved by the Bank and others throughout the world. Future supplements will present improvements in some technologies, such as biogas; information on others, such as marine disposals, combined sewers, water-saving plumbing fixtures, and small-bore sewer design and operation; and more precise estimates of materials and construction requirements on both per capita and population-density bases.

This manual is intended both for professionally trained project engineers and scientists and for technicians and field workers who are familiar with the geographical and cultural conditions of the project areas to which they are assigned. The reason for this emphasis is clear: it is upon the observations, interpretations, and communications of staff in the field that the ultimate success of sanitation programs depends; technical and economic analyses must incorporate recommendations from knowledgeable field specialists.

The findings and recommendations of this report are based on surveys of relevant literature (volumes 6 and 4), an evaluation of sociocultural aspects (volume 5), detailed field studies (volumes 6, 7, 8, and 9), and the personal observations, experience, and advice of colleagues in the World Bank and other institutions. Because the list of contributors is so large, only a few can be mentioned. We wish to acknowledge in particular the support given to this project by Mr. Yves Rovani, Director, Energy Department, and the valuable review and direction provided by the Bank staff serving on the Steering Committee for the project: Messrs. E. Jaycox, A. Bruestle, W.

Cosgrove, F. Hotes, D. Keare, J. Linn, R. Middleton, R. Overby, A. Stone, and C. Weiss; Messrs. M. McGarry and W. Rybczinski were generous in their advice on specific issues. The contributions of consultants conducting field studies and providing specialized reports are acknowledged in the volumes to which they have contributed.

Special thanks are due to Messrs. R. Feachem and D. Bradley, who have generously contributed help and advice and allowed us to abstract and quote from some of their own publications.

The reports could not have been produced without the dedication and cooperation of the secretarial staff, Margaret Koilpillai, Julia Ben Ezra, and Susan Purcell, and the editorial and production assistance of research assistants Sylvie Brebion and David Dalmat. Their work is gratefully acknowledged.

John M. Kalbermatten.
DeAnne S. Julius
Charles G. Gunnerson
D. Duncan Mara

CHAPTER I

INTRODUCTION

A convenient supply of safe water and the sanitary disposal of human wastes are essential, although not the only, ingredients of a healthy, productive life. 1/ Water that is not safe for human consumption can spread disease; water that is not conveniently located results in the loss of productive time and energy by the water carrier--usually women or children; and inadequate facilities for excreta disposal reduce the potential benefits of a safe water supply by transmitting pathogens from infected to healthy persons. Over fifty infections can be transferred from a diseased person to a healthy one by various direct or indirect routes involving excreta. Coupled with malnutrition, these excreta-related diseases take a dreadful toll in developing countries, especially among children. For example, in one Middle Eastern country, half of the children born alive die before reaching the age of five as a result of the combined effects of disease and malnutrition; in contrast, only 2 percent of children born in the United Kingdom die before reaching their fifth birthday.

Invariably it is the poor who suffer the most from the absence of safe water and sanitation, because they lack not only the means to provide for such facilities but also information on how to minimize the ill effects of the insanitary conditions in which they live. As a result, the debilitating effects of insanitary living conditions lower the productive potential of the very people who can least afford it.

Dimensions of the Problem

To understand the magnitude of the problem, it is only necessary to look at data collected by the World Health Organization in preparation for the United Nations Water Conference that took place in Mar del Plata, Argentina, in the spring of 1977. These figures show that only 32 percent of the population in developing countries have adequate sanitation services; that is, about 630 million out of 1.7 billion people. Population growth will add another 700 million people who will have to be provided with some means of sanitation if the goals of the International Drinking Water Supply and Sanitation Decade--adequate water supply and sanitation for all people--are to be achieved. A similar number of people, about 2 billion, will require water supply by the same date. Thus, roughly half the world's present total population of just over 4 billion people have to be provided with water and sanitation services to meet the Decade's targets; that is, approximately half a million people per day for the next 12 years.

One of the fundamental problems in any attempt to provide the necessary sanitation services is their cost. Very general estimates based on

---

1. Much of this chapter is taken from chapters 1 and 2 of volume 1 of this report series.

existing per capita costs indicate that up to $60 billion would be required to provide water supply for everyone and from $300 to $600 billion would be needed for sewerage. 1/ Per capita investment costs for the latter range from $150 to $650, which is totally beyond the ability of the intended beneficiaries to pay. It should be remembered that some one billion of these unserved people have per capita incomes of less than US$200 per year, with more than half of those below US$100 per year.

In industrialized countries, the standard solution for the sanitary disposal of human excreta is waterborne sewerage. Users and responsible agencies have come to view the flush toilet as the absolutely essential part of an adequate solution to the problem of excreta disposal. This method, however, was designed to maximize user convenience rather than health benefits. This objective may be important in developed countries, but it has a lower priority in developing countries. In fact, conventional sewerage is the result of slow development over decades, even centuries, from the pit latrine to the flush toilet, and the present standard of convenience has been achieved at substantial economic and environmental costs.

The problem facing developing countries is a familiar one: high expectations coupled with limited resources. Decision-makers are asked to achieve the standards of convenience observed in industrialized countries. Given the backlog in service, the massive size of sewerage investments and the demands on financial resources by other sectors, they do not have the funds to realize this goal. Sewerage could be provided for a few, but at the expense of the vast majority of the population. As a consequence, many developing countries have taken no steps at all toward improving sanitation. The very magnitude of the task has effectively discouraged action.

At the present time the first priority of excreta disposal programs in developing countries should be the improvement of human health; that is, the accomplishment of a significant reduction in the transmission of excreta-related diseases. This health objective can be fully achieved by sanitation technologies which are much cheaper than sewerage. The goals for the Decade of the 1980s intentionally do not specify sewerage, but call for the sanitary disposal of excreta, leaving the disposal method to the discretion of individual governments. Similarly, Decade targets include an adequate supply of safe water, without specifying the methods to be used to achieve the goal. To provide as many people as possible with safe water and sanitation is to find technologies which can achieve these objectives with the resources available.

The Constraints

The primary constraints to the successful provision of sanitation facilities in developing countries are the lack of funds, the lack of trained personnel, and the lack of knowledge about acceptable alternative technologies. Where high cost systems developed in industrialized countries have been used

---

1. All dollar figures in this report are 1978 U.S. dollars.

to solve waste disposal problems in developing countries, access to the facilities has been limited to the higher income groups, who are the only ones able to afford them. Little official attention has been paid to the use of low-cost sanitation facilities to provide health benefits to the majority of the population. This situation exists because officials and engineers in developing and developed countries alike are not trained to consider or design alternative sanitation systems, nor to evaluate the impact of these alternatives on health. Waterborne sewerage was designed to satisfy convenience and local environmental, rather than health, requirements. The lesson commonly (but erroneously) drawn from the historical development of sanitation technology is that the many less costly alternatives formerly used should be abandoned rather than improved. Therefore, few serious attempts have been made to design and implement satisfactory low-cost sanitation technologies. The implementation of such alternatives is complicated by the need to provide for community participation in both the design and operating stages of the projects. Few engineers are aware of the need to consider the sociocultural aspects of excreta disposal, and fewer still are competent to work with a community to determine the technology most compatible with its needs and resources.

Given these constraints, it is not surprising that sanitation service levels in developing countries have remained low. A major effort is needed to identify and develop alternative sanitation technologies appropriate to local conditions in developing countries and designed to improve health rather than raise standards of user convenience. Clearly the solutions must be affordable to the user and reflect community preferences if they are to find acceptance.

Incremental Sanitation

An examination of how conventional waterborne sewerage came about reveals three facts very clearly. First, excreta disposal went through many stages before sewerage. Second, existing systems were improved and new solutions devised whenever the old solution was no longer satisfactory. Third, improvements were implemented over a long period of time and at substantial cost. Sewerage was not a grand design implemented in one giant step, but the end result of a long series of progressively more sophisticated solutions. For example, the collection of night soil from bucket latrines in eighteenth century London was a step toward reducing gross urban pollution. This was followed by piped water supplies and the development of combined sewerage, then to separate sanitary sewerage, and eventually to sewage treatment prior to river discharge. This particular series of improvements spanned over 100 years--a long time frame necessitated by historical constraints in science and technology. Present levels of knowledge enable sanitation planners to select from a wider range of options and to design a sequence of incremental sanitation improvements. The choice of proceeding with sequential improvements is the user's. He also decides the time frame over which improvements are to be made and is thus able to provide higher levels of convenience, keeping pace with increasing income. Most importantly, a user can start with a basic low-cost facility without the need to wait for greater income, knowing that he has a choice to provide for greater convenience if he has the funds and wishes to do so at some future date.

Sanitation Program Planning

Sanitation program planning is the process by which the most appropriate sanitation technology for a given community is identified, designed, and implemented. The most appropriate technology is defined as that which provides the most socially and environmentally acceptable level of service at the least economic cost.

The process of selecting the appropriate technology begins with an examination of all of the alternatives available for improving sanitation; these are described in part II of this manual. There will usually be some technologies that can be readily excluded for technical or social reasons. For example, septic tanks requiring large drainfields would be technically inappropriate for a site with a high population density. Similarly, a composting latrine would be socially inappropriate for people who have strong cultural objections to the sight or handling of excreta. Once these exclusions have been made, cost estimates are prepared for the remaining technologies. These estimates should reflect real resource cost to the economy, and this may involve making adjustments in market prices to counteract economic distortions or to reflect development goals such as employment creation. Since the benefits of various sanitation technologies cannot be quantified, the health specialist must identify those environmental factors in the community that act as disease vehicles and recommend improvements that can help prevent disease transmission. The final step in identifying the most appropriate sanitation technology rests with the intended beneficiaries. Those alternatives that have survived technical, social, economic, and health tests are presented to the community with their attached financial price tags, and the users themselves decide what they are willing to pay for. A technology selection algorithm that incorporates economic, social, health, and technical criteria is presented in chapter 2.

Figure 1-1 shows how the various checks are actually coordinated in practice. The checks themselves, of course, are interrelated. A technology may fail technically if the users' social preferences militate against its proper maintenance. The economic cost of a system is heavily dependent upon social factors, such as labor productivity, as well as technical parameters. Because it is operationally difficult to employ simultaneous (or even iterative) decision processes, however, a step-by-step approach with feedback across disciplines is suggested.

For simplicity it is assumed that separate individuals or groups are responsible for each part, although in practice responsibilities may overlap. In step 1 each specialist collects the information necessary to make his respective exclusion tests. For the engineer, public health specialist, and behavioral scientist 1/ this data collection would usually

---

1. The term "behavioral scientist" is used to describe a person skilled in assessing community needs, preferences, and processes. The person's training may be in anthropology, communications, geography, sociology, or psychology, or it may come from a wide variety of education and experience.

take place in the community to be served. The economist would talk with both government and municipal officials to obtain the information necessary to calculate shadow rates and to obtain information on the financial resources likely to be available. The behavioral scientist would consult with and survey the potential user and community groups. Then the engineer and sociologist apply the information they have collected to arrive at preliminary lists of technically and socially feasible alternatives. The public health specialist relates the most important health problems to any relevant environmental factors involving water and/or excreta. In the third step the economist prepares economic cost estimates for those technologies that have passed the technical and social tests, and selects the least-cost alternative for each technology option. As the fourth step the engineer prepares final designs for these remaining choices. At this stage the social information collected in step 1 should be used to determine the siting of the latrine on the plot, the size of the superstructure, the materials to be used for the seat or slab, and other details that may have low technical and economic impact but make a major difference in the way the technology is accepted and used in the community. The designs should also incorporate features necessary to maximize the health benefits from each technology. Final designs are turned over to the economist in the fifth step so that financial costs can be determined, including how much the user would be asked to pay for construction and maintenance of each alternative. The last step is for the behavioral scientist to present and explain the alternatives, their financial costs, and their future upgrading possibilities to the community for final selection. The form that this community participation takes will vary greatly from country to country.

As part of the sanitation planning process, the existing or likely future pattern of domestic water use should be ascertained so that the most appropriate method of sullage disposal can be selected. This is particularly important in the case of properties with a multiple tap level of water supply service, as the large wastewater flows may, according to conventional wisdom, preclude the consideration of technologies other than sewerage or, in low-density areas, septic tanks with soakaways. It is not necessary, however, either for reasons of health or user convenience, for domestic water consumption to exceed 100 liters per capita daily (lcd). 1/ The use of low-volume cistern-flush toilets and various simple and inexpensive devices for reducing the rate of water flow from taps and showerheads can achieve very substantial savings in water consumption without any decrease in user convenience or requiring any change in personal washing habits. These savings can be as high as 75 percent in high-water-pressure areas and 30-50 percent in low-pressure areas. If wastewater flows can be reduced by these means, then the options for sanitation facilities are much broader than only conventional sewerage. In addition, separation of toilet wastes from other wastewater by simple modifications in household plumbing coupled with improved designs of septic tank filters (see chapter 9) may make nonsewered options more widely feasible.

---

1. Where water has to be carried, 20 liters per capita daily is considered a minimum acceptable level. With closer standpipe spacing and yard hydrants, consumption rises typically to 50 liters per capita daily and, with house connections, 100 liters per capita daily.

The framework suggested in this chapter for the identification of the most appropriate technology is probably more time intensive than that of traditional feasibility analysis. It also requires the recruitment of staff in other disciplines, such as behavioral scientists. In addition, the concept of incremental sanitation requires municipal activity in sanitation programs to be spread over a considerably longer time frame because the user has the option of whether and when to proceed to the next higher level of convenience. Yet we believe that the planning format discussed above has a far greater chance of achieving operational success because the most appropriate sanitation technology is drawn from a wider range of alternatives, imposes the least cost burden on the economy, maximizes the health benefits obtainable, and is selected after extensive interaction with the intended beneficiaries. Because incremental sanitation systems are so much less expensive than sewerage (both in initial investment and total discounted cost), many more people can be provided with satisfactory excreta disposal facilities for the same amount of money, and these facilities can be upgraded as more money becomes available in the future. Given the huge service backlog and the severe investment capital constraints in developing countries, incremental sanitation may be the only, as well as the best, way to meet the sanitation goals of the International Drinking Water Supply and Sanitation Decade.

Figure 1–1. Recommended Structure of Feasibility Studies for Sanitation Program Planning

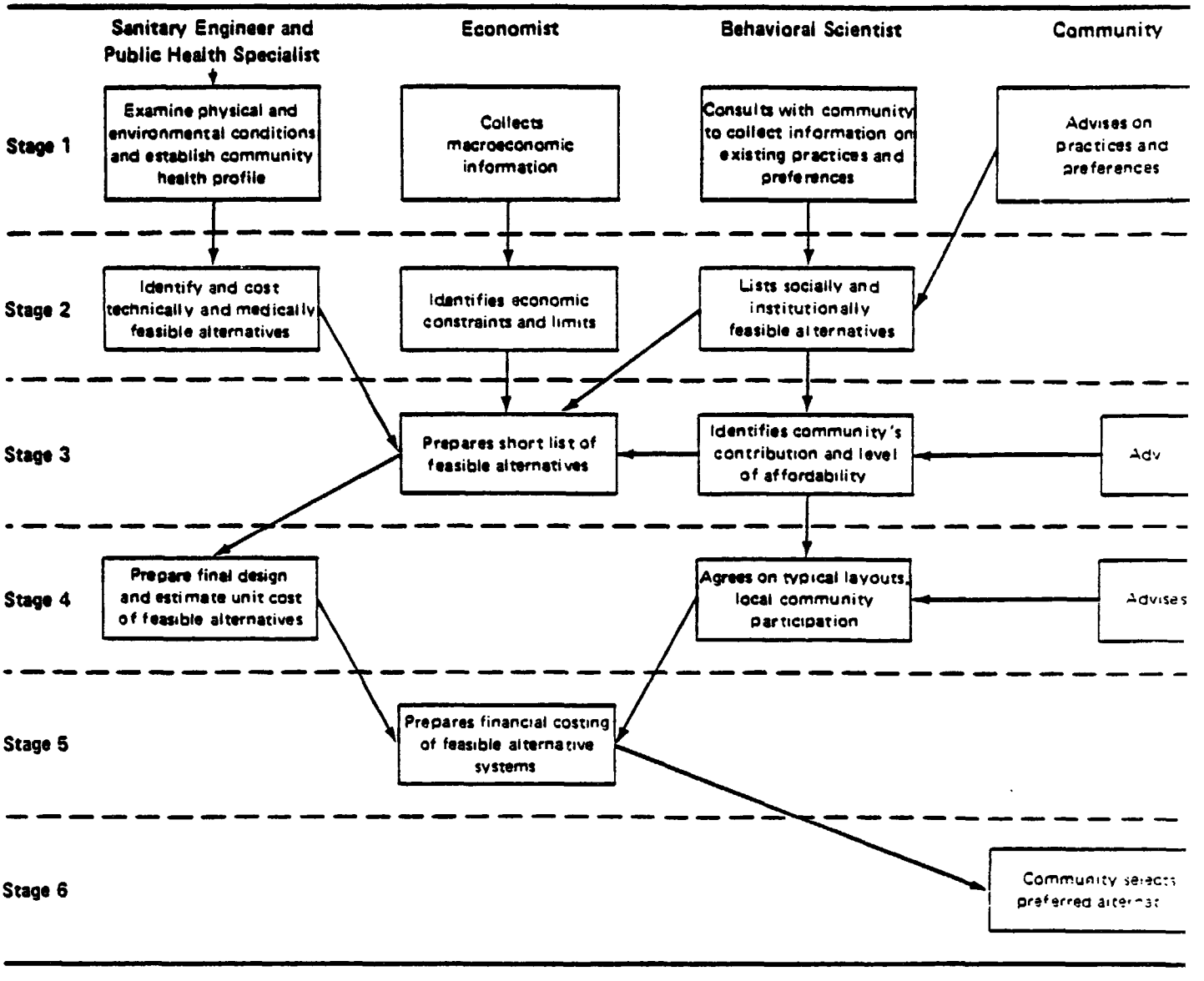

CHAPTER 2

SANITATION TECHNOLOGY SELECTION

Once different sanitation technologies have been compared on a technical basis, the sanitation program planner must select from those available the one most appropriate to the needs and resources of the community. This selection, which should be based on a combination of economic, technical, and social criteria, essentially reduces to the question: which is the cheapest, technically feasible technology that the users can afford and maintain, prefer to cheaper alternatives, and the local authority is institutionally capable of operating? The critical information items needed for selection and design of sanitation systems are indicated on Table 2-1.

Selection Algorithm

Figures 2-1, 2-2, and 2-3 present algorithms that can be used as a guide to the selection of the most appropriate sanitation technology for any given community in developing countries. It should be stressed that the algorithm is meant only as a guide to the decision-making process. Its main virtue is that it prompts engineers and planners to ask the right sort of questions, which perhaps they would not otherwise ask; some answers can only be obtained from the intended beneficiaries. Although it is believed that the algorithm is directly applicable to most situations encountered in developing countries, there will always be the occasional combination of circumstances for which the most appropriate option is not that suggested by it. The algorithm, therefore, should not be used blindly in place of engineering judgement, but as a tool to facilitate the critical appraisal of the various sanitation options, especially those for the urban and rural poor. The algorithm is most useful when there are no existing sanitation systems, other than communal facilities, in the community under consideration. In general the existing household sanitation systems will influence the technology chosen to improve excreta and sullage disposal. Additionally, it is important to consider the existing or planned sanitation facilities in neighboring areas. In this context, and in the algorithm, affordability is taken to embrace both economic and financial affordability at the household, municipal, and national levels, including the question of subsidies.

The algorithm commences in Figure 2-1 by asking if there is (or is likely to be in the near future) an in-house level of water supply service to the houses under consideration. This is the key question as its answer immediately determines whether cistern-flush toilets can be considered. If the houses do have piped water, if there is a strong social desire for cistern-flush toilets, and if they can be afforded, the main engineering problem is how to dispose of the wastewater. Septic tanks of the conventional kind are preferable to conventional sewerage because they are cheaper, but their technical feasibility

TABLE 2-1

CRITICAL INFORMATION ITEMS NEEDED FOR SELECTION AND DESIGN OF SANITATION SYSTEMS

Climatic conditions

Temperature ranges; precipitation, including drought or flood periods.

Site conditions

Topography.
Geology, including soil stability.
Hydrogeology, including seasonal water table fluctuations.
Vulnerability to flooding.

Population

Number, present and projected.
Density, including growth patterns.
Housing types, including occupancy rates and tenure patterns.
Health status of all age groups.
Income levels.
Locally available skills (managerial and technical)
Locally available materials and components.
Municipal services available, including roads, power.

Environmental sanitation

Existing water supply service levels, including accessability and reliability, and costs.
Marginal costs of improvements to water supply.
Existing excreta disposal, sullage removal and storm drainage facilities.
Other environmental problems such as garbage or animal wastes.

Socio-cultural factors

People's perceptions of present situation and interest in or susceptibility to change.
Reasons for acceptance/rejection of any previous attempts at upgrading.
Level of hygiene education.
Religious or cultural factors affecting hygiene practices and technology cho
Location or use of facilities by both sexes and all age groups.
Attitudes towards resource reclamation.
Attitudes towards communal or shared facilities.

Institutional framework

Allocation of responsibility, and effectiveness of state, local or municipal institutions, in providing the following services:
- Water
- Sewerage, Sanitation, Street cleansing, Drainage
- Health
- Education
- Housing and urban upgrading

Note: The priority between various items will vary with the sanitation options being considered; the list above indicates typical areas which should be investigated by planners and designers.

depends on the availability and suitability of land for soakaways and, in medium-density areas especially, on whether water use can be reduced to permit ground disposal of the effluent. If septic tanks cannot be used, conventional sewerage is recommended, provided that it is affordable and that there are no strong environmental reasons to oppose it. If neither septic tanks nor conventional sewerage is affordable, or if the community does not have an in-house water supply service, then cistern-flush toilets cannot be used. The community may have a single yard tap supply or it may rely on hand-carried water from either public standposts or water vendors. In both these cases the key question is whether the quantity of water available on site is sufficient to enable a sewered PF system to function satisfactorily. A wastewater (sullage plus flush water) flow of 50 liters per capita daily is a safe design minimum for this purpose. If the wastewater flow is greater than 50 liters per capita daily, then a sewered PF system can be used, provided it is affordable and that there is no social preference for night soil to be collected separately for subsequent reuse.

If the quantity of water available is not sufficient for several systems, the choice lies between the various on-site excreta disposal technologies, with appropriate facilities for the disposal of sullage. The algorithm recommences in Figure 2-2 by asking if household reuse of excreta is socially acceptable. If it is, then the choice is between three-stage septic tanks and double-vault composting toilets. Reuse of liquid excreta from three-stage septic tank systems is appropriate for rural areas only, whereas DVC toilets are suitable for urban areas as well, provided that there is space for them and that the users are able and willing to reuse the compost in their own gardens or are able to give or sell it to local farmers. DVC toilets also require a sufficient and continuous supply of organic waste materials and a very high level of user care, which often can only be achieved by a vigorous and sustained program of user education (the cost of which must be included in the total cost of the system). If all these conditions can be met and if the cost is lower than those of the alternative on-site disposal technologies, then either the three-stage septic tank or a DVC toilet is recommended, as determined by the algorithm in Figure 2-2.

If DVC toilets and the three-stage septic tank system cannot be used, the choice lies among VIP latrines, VIDP latrines, ROECs, PF toilets, vault toilets, and communal sanitation blocks as determined by the algorithm in Figure 2-3. If there is space enough for two alternating pit sites and if the groundwater table is at least 1 meter below the ground surface, then the recommended choice is either VIP latrines, VIDP latrines, ROECs or, if there is sufficient water and if the soil is sufficiently permeable, PF toilets. As the costs of these systems are very similar, the choice among them should be left to the community. There may often be a strong social preference for PF toilets because these can be located inside the house. PF toilets require water to be hand carried to and, for user convenience, stored in the toilet. This may be difficult in houses dependent on public standpipes or water vendors, and is an essential point to discuss with the community or their representatives. In houses with yard taps, a simple upgrading procedure, which can be done by individual householders (but under municipal control), is to pipe water into the toilet compartment.

In those urban areas where VIP latrines, ROECs and unsewered PF toilets cannot be used, the choice is between vault toilets and communal facilities. Vaults are preferable to communal facilities but they are more expensive and require access for collection vehicles, which the municipality must be capable of maintaining. In a few very high density areas there may not be access for even the smallest collection vehicles. In such areas either communal sanitation facilities are necessary or the vaults must be emptied by manually operated pumps, but it should be pointed out that the community may prefer the latter approach because it is an in-house facility and one which has good potential for upgrading to a sewered PF system. However there are some high density/low income urban areas, such as those built on tidal mudflats, for which a sewered PF system will always remain unaffordable, though be technically feasible, and a communal facility is the only realistic sanitation improvement. Further improvement will generally be extremely difficult and often impossible both technically and economically, unless it forms part of an urban renewal scheme involving overall housing improvements.

Post-selection Questions

Once a tentative selection of the most appropriate technology has been made, several questions should be asked again as checks. These are:

(1) Is the technology socially acceptable? Is it compatible with cultural and religious requirements? Can it be maintained by the user and, if appropriate, by the municipality? Are municipal support services (e.g. educational, inspectional) required? Can they be made available?

(2) Is the technology politically acceptable?

(3) Are the beneficiaries willing (as well as able) to pay the full cost of the proposed facility? If not, are user subsidies (direct grants or "soft" loans) available? Is foreign exchange required? If so, is it available?

(4) What is the expected upgrading sequence? What time frame is involved? Is it compatible with current housing and water development plans? Are more costly technologies in the upgrading sequence affordable now?

(5) What facilities exist to produce the hardware required for the technology? If lacking, can they be developed? Are the necessary raw materials locally available? Can self-help labor be used? Are training programs required?

(6) Can the existing sanitation system, if any, be upgraded in any better way than that shown in the algorithm?

(7) Is there a neighboring area whose existing or planned sanitation system makes a more costly alternative feasible? (e.g. small sewers discharging to an existing sewer system).

(8) What is the potential for reuse? If low, would the adoption of a technology with a higher reuse potential be economically justifiable?

(9) If the selected technology cannot deal with sullage, what facilities for sullage disposal are required? Is the amount of sullage water low enough, or could it be reduced sufficiently, to preclude the need for sullage disposal facilities?

Figure 2 - 1. First-stage Algorithm for Selection of Sanitation Technology

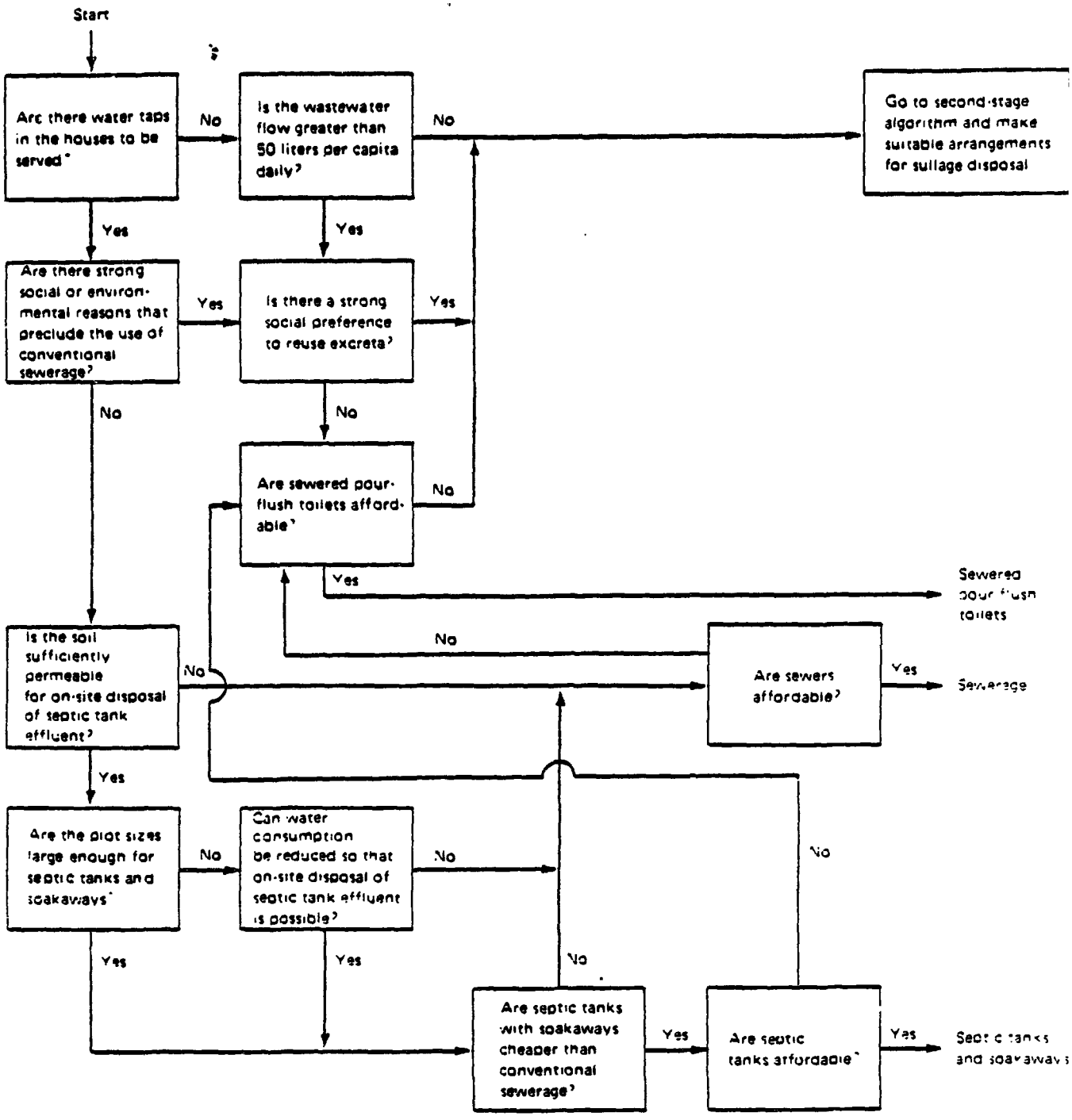

Figure 2 2 Second-stage Algorithm for Selection of Sanitation Technology

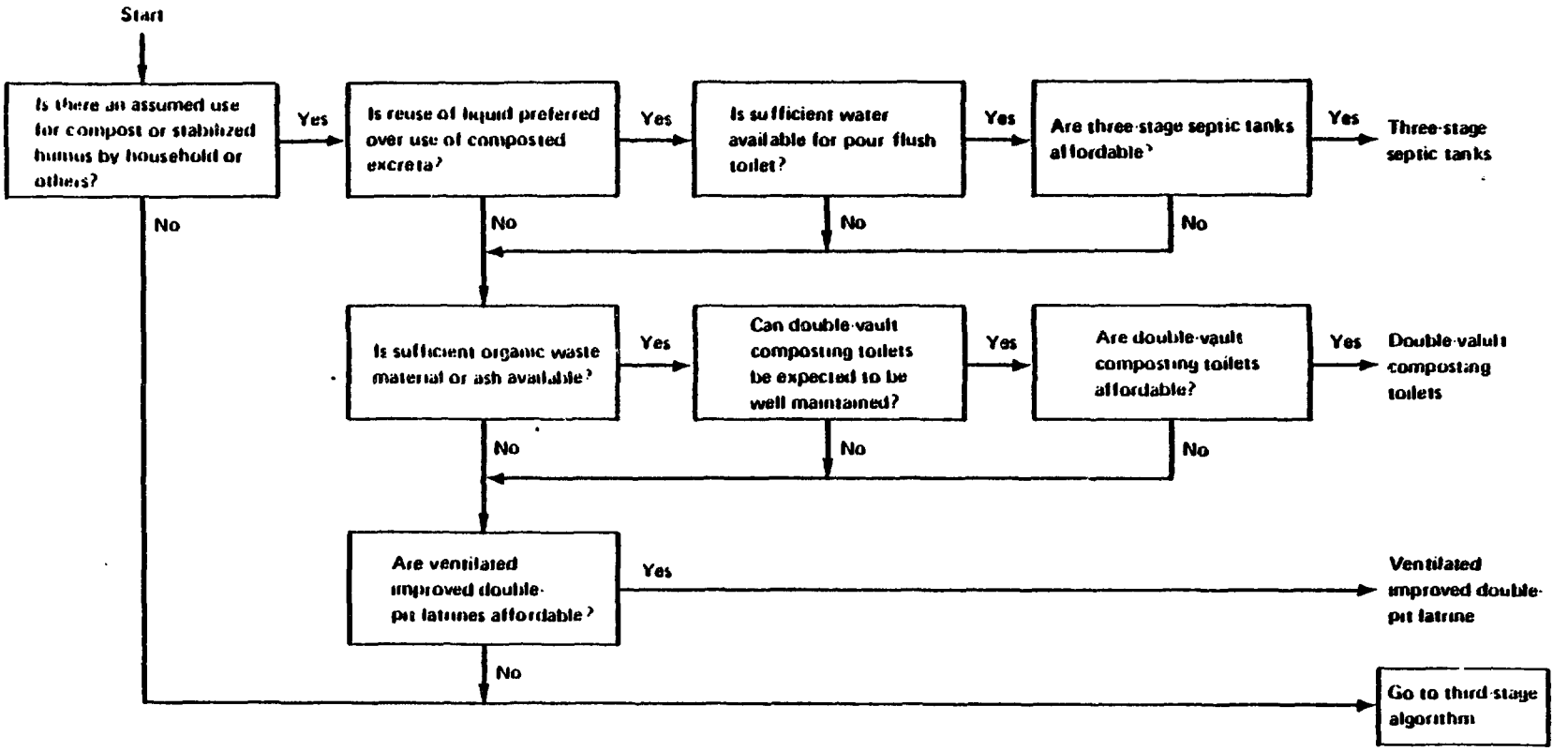

Figure 2 - 3 Third-stage Algorithm for Selection of Sanitation Technology

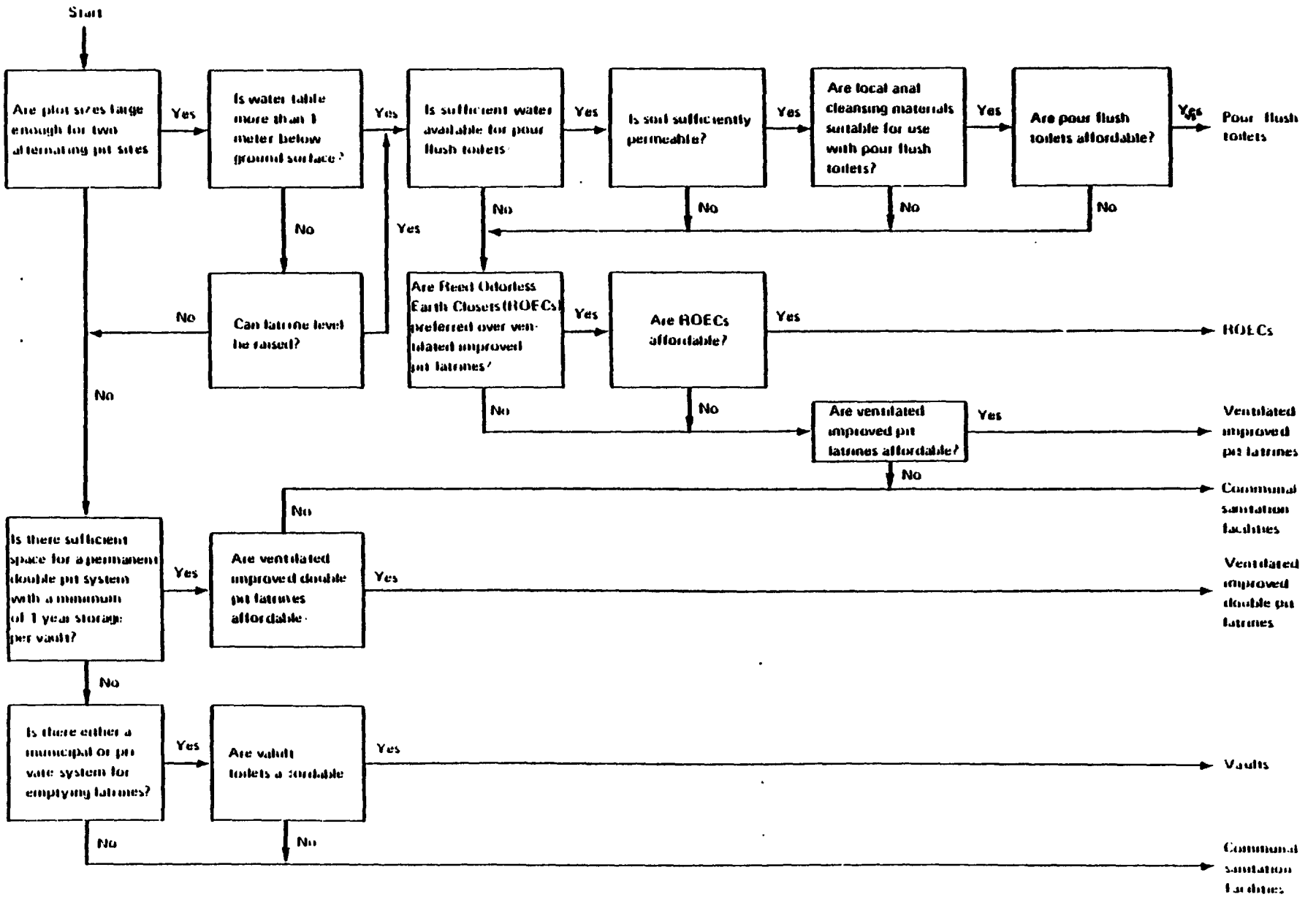

CHAPTER 3

LATRINE AND TOILET SUPERSTRUCTURES

The function of the toilet superstructure is to provide privacy and to protect the user and the toilet from the weather. Superstructure design requires assessment of whether separate facilities are required for men and women in the same household. Local customs and preferences often influence its location, orientation, shape, construction material, design (e.g., without roof, window details), and size. Color may be very important to householder use and maintenance of the facility. These details should be designed in consultation with the user. The technical design requirements of the superstructure are relatively straightforward and may be stated as follows:

(1) Size: the plan area should be at least 0.8 cubic meter to provide sufficient space and generally not more than 1.5 cubic meters. The roof height should be a minimum of 1.8 meters.

(2) Ventilation: there should be several openings at the top of the walls to dissipate odors and, in the case of VIP latrines and ROECs, to provide the through draft required for functioning of the vent pipe. These openings should be about 75 to 100 millimeters x 150 to 200 millimeters in size; often it is convenient to leave an open space between the top of the door and the roof.

(3) The door: this should open outwards in order to minimize the internal floor area. In some societies, however, an outward opening door may be culturally unacceptable, and an open entrance with a privacy wall may be preferred. In either case it must be possible to fasten the door from the inside, and it may also be necessary to provide an external lock to prevent use by unauthorized persons. At its base the door should be just clear of the floor in order to provide complete privacy while preventing rot of the bottom of the door planks.

(4) Lighting: natural light should be available and sufficient. The toilet should be sufficiently shaded, however, to discourage flies; this is particularly important in the case of VIP latrines and ROECs.

(5) The walls and roof: these must be weatherproof, provide adequate privacy, exclude vermin, and be architecturally compatible in external appearance with the main house. In urban areas especially an L-shaped wall in front of the door may be regarded by the community as desirable or essential for privacy.

A wide variety of materials may be used to construct the superstructure, for example: brick or concrete blocks, with tile or corrugated iron or asbestos cement roof; mud and wattle, bamboo or palm thatch, with palm thatch roof; ferrocement, sheet metal, or timber with corrugated iron or asbestos cement roof. Some alternatives are illustrated in Figure 3-1. The choice depends on cost, material availability, and community preferences. The important point is that they meet the criteria (5) above. If the superstructure is for a VIP latrine or ROEC, it may not be a permanent structure but one that must be dismantled and re-erected over or adjacent to the new pit. It should therefore be designed with this in mind, although this becomes of less economic importance as the design life of the pit increases.

Many communities, given the choice, opt for an inside toilet. Only PF and cistern-flush toilets are suitable for interior locations. If these are not to be provided initially, it may be sensible to design the house with a toilet compartment that can be fitted out at a later date as part of a sanitation upgrading program.

In Figure 3-1, several low-cost, easily constructed superstructures are shown. A wide variety of options is available to the homeowner, only four of which are illustrated here. The choice of superstructure should reflect the users personal preferences.

Figure 3 -1. Alternative Materials for Latrine Superstructures Part A.

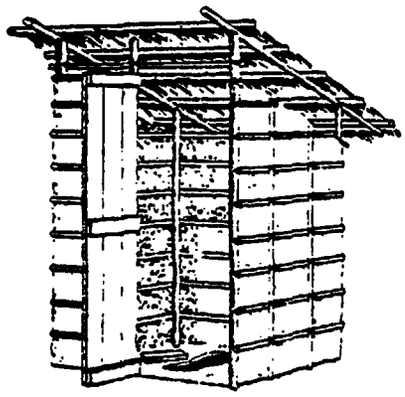

A. Mud and wattle walls and palm thatch roof

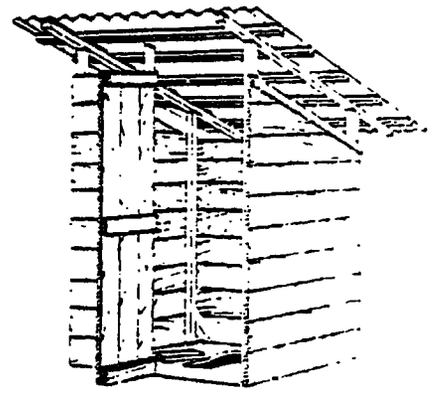

B. Timber walls and corrugated iron or asbestos-cement roof

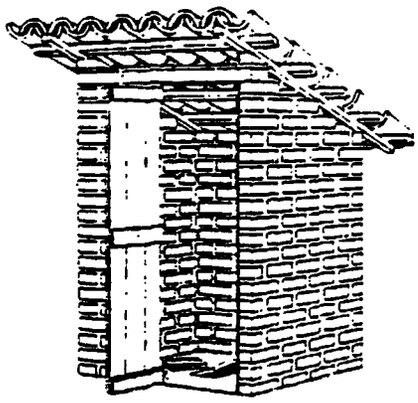

C. Brick walls and tile roof (an alternative is concrete block walls and corrugated iron or asbestos-cement roof)

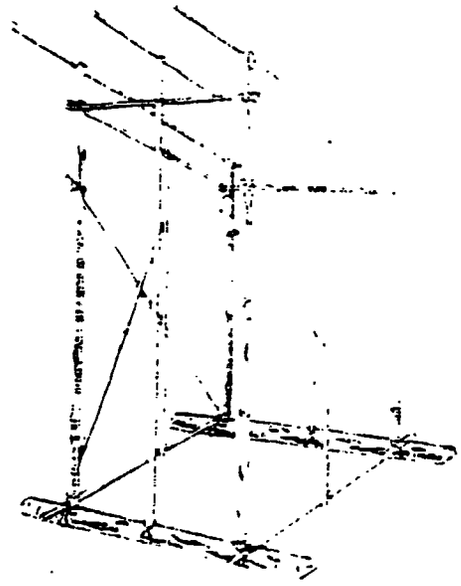

D. Rough-cut tree limbs and logs

Figure 3 -1 (Continued)
Part B.

E. Palm thatch wall and roof covering

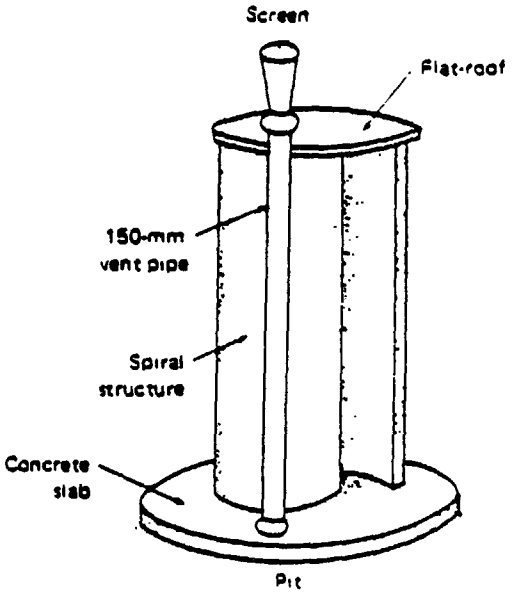

F. A ventilated pit privy

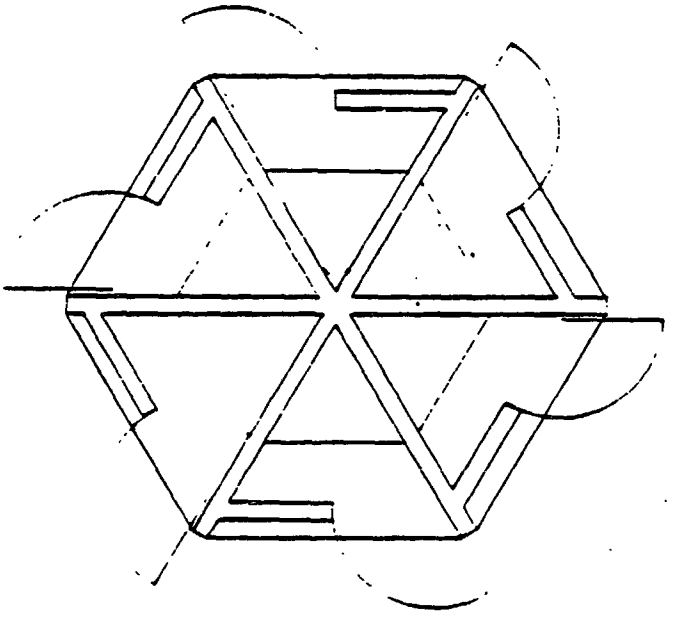

Plan

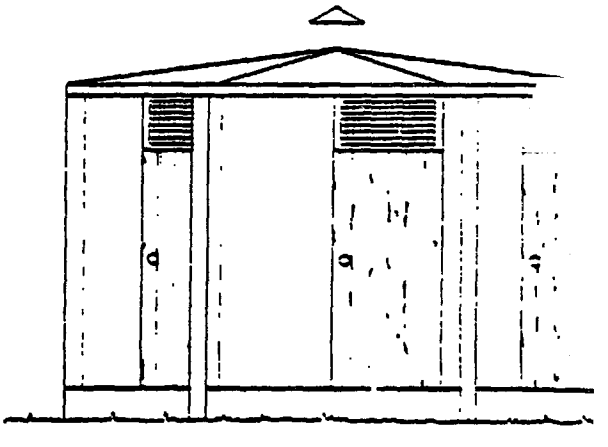

Elevation

G. Multiple-compartment Pit Latrine

Source Part A. Wagner and Lanoix (1958).
Part B E. Wagner and Lanoix (1958) F. Appropriate Technology (Vol. 6 No. 3, November 1979)
G. Adapted from a design used by the foundation or Cooperative housing in Haiti.

CHAPTER 4

LATRINE AND TOILET FIXTURES

A suitable base or foundation for latrine or toilet fixtures is often included in the construction of the pit or other substructures. Alternatively, the base may be constructed separately of wood or integrally as part of the squatting plate.

It is essential to determine whether the local preference is to sit or squat during defecation. If the wrong facility is chosen, it will have to be converted at unnecessary expense; alternatively, it will remain unused or the superstructure will be used for other purposes such as grain storage. Anal cleansing practices and materials also need to be evaluated; flap-trap designs, conventional and VIP latrines, ROECs (chapter 5), and aquaprivies can accept rocks, mud balls, maize cobs, and other bulky materials that would clog water seals.

Squatting Plates for VIP Latrines

Four important design considerations (for further details, see chapter 5) are:

(1) The opening should be about 400 millimeters long, to prevent soiling of the squatting plate, and at most 200 millimeters wide, to prevent children falling into the pit. A "keyhole" shape is suitable.

(2) Footrests should be provided as an integral part of the squatting plate and properly located so that excreta fall into the pit and not onto the squatting plate itself.

(3) The free distance from the back wall of the superstructure to the opening in the squatting plate should be in the range of 100 to 200 millimeters; if it is less there is insufficient space, and if it is more there is the danger that the rear part of the squatting plate will be soiled. Generally, the preferred distance is 150 millimeters.

(4) The squatting plate should have no sharp edges to make its cleaning difficult and unpleasant.

A variety of materials can be used to make the squatting plate: timber, reinforced concrete, ferrocement, and sulfur cement are usually the cheapest; but glass reinforced plastic, high-density molded rubber, or PVC and ceramics can also be used. Cost and aesthetics are the important criteria, apart from strength and rigidity. A variety of finishes can be applied to concrete or ferrocement squatting plates (for example, alkali-resistant gloss paint and polished marble chippings) or the concrete itself can be colored.

Aesthetic considerations are often extremely important to the users and should never be ignored by engineers and planners; indeed, they should make a special effort to determine community preferences before the final design stage.

Figure 4-1 shows a good design for a reinforced concrete squatting plate. A ferrocement version of this is possible and advantageous since it need only be 18 to 25 millimeters thick, rather than 70 millimeters as shown, with consequent savings in materials and weight but with equal strength The mix specification for ferrocement is: 1 part cement, two parts medium to coarse sand, and 0.4 parts water; reinforcement is provided by two layers of 12-millimeter-opening chicken wire across the slab. An alternative ferrocement design with an integral metal "flap-trap" has been developed in Tanzania (Figure 4-2). The metal flap-trap is prefabricated from 1-millimeter thick mild steel sheet and then galvanized. It is not known how successful this design is; Figure 4-2 is included to demonstrate the feasibility of developing locally acceptable alternatives.

Squatting plates should be cast in an oiled timber mold for ease of construction. If the scale of manufacture is large, a steel mold may be preferable.

Squatting Plates for ROECs

With ROECs (for further details, see chapter 5) it is necessary to provide a steeply (60°) sloping chute to direct the excreta into the adjacent offset pit (Figure 4-3). The chute diameter should be 200 millimeters but should be enlarged under the squatting plate to attach around the entire squatting plate opening. It is possible, but rather difficult, to cast the chute in ferrocement as an integral part of the squatting plate; in practice it is easier to use metal or polyvinyl chloride (PVC) pipe cut to shape.

Pedestal Seats for VIP Latrines and ROECs

The important design criteria are the seat height and the size of the opening. For adults a 250-millimeter diameter is normally suitable. The pedestal riser can be constructed in brick, concrete blockwood, or wood; internal surfaces of ROECS should be smooth and accessible for cleaning. To encourage proper use by children and to prevent them falling into the pit, a second smaller (150-millimeter diameter) seat should be provided. This may be a separate seat on the seat cover. A cover should always be provided to minimize fly access, but it should have several small holes drilled in it to permit the through draft necessary in these toilets for odor control. Alternative designs are shown on Figure 4-3.

Squatting Plates for Composting Toilets

These are the same as squatting plates for VIP latrines, except that if urine is to be excluded a suitable urine drainage channel must be provided (See chapter 6, Figure 6-2).

Squatting Plates for PF and Vault Toilets

If the squatting plate is situated immediately over the pit or vault (for further details, see chapter 7), the design is of the type shown in Figure 4-4. This unit is most easily made from ferrocement or reinforced plastic. An alternative sheet metal design, essentially a PF modification of the Tanzanian "flap-trap" described above, is shown in Figure 4-5. It is essential that this unit be properly and completely galvanized before it is cast into the ferrocement slab. Figure 4-6 shows a similar design that can easily be produced in plastic. When used with VIP latrines, all designs of squatting plates discharging to the pit should be placed to flush forward to avoid erosion of the pit wall.

If the squatting plate is connected to a completely displaced pit or vault, the design is of the type shown in Figure 4-7.

Pedestal Seats for PF and Vault Toilets

These are essentially the same design as for cistern-flush toilets but with a smaller water seal (generally 15 to 20 millimeters) and a smaller exposed surface area and volume of water (around 75 square centimeters and 2 liters respectively). A low-cost ceramic design like that from Colombia costs about $5 and is shown in Figure 4-7.

Figure 4 – 1. Concrete Squatting Plate
millimeters

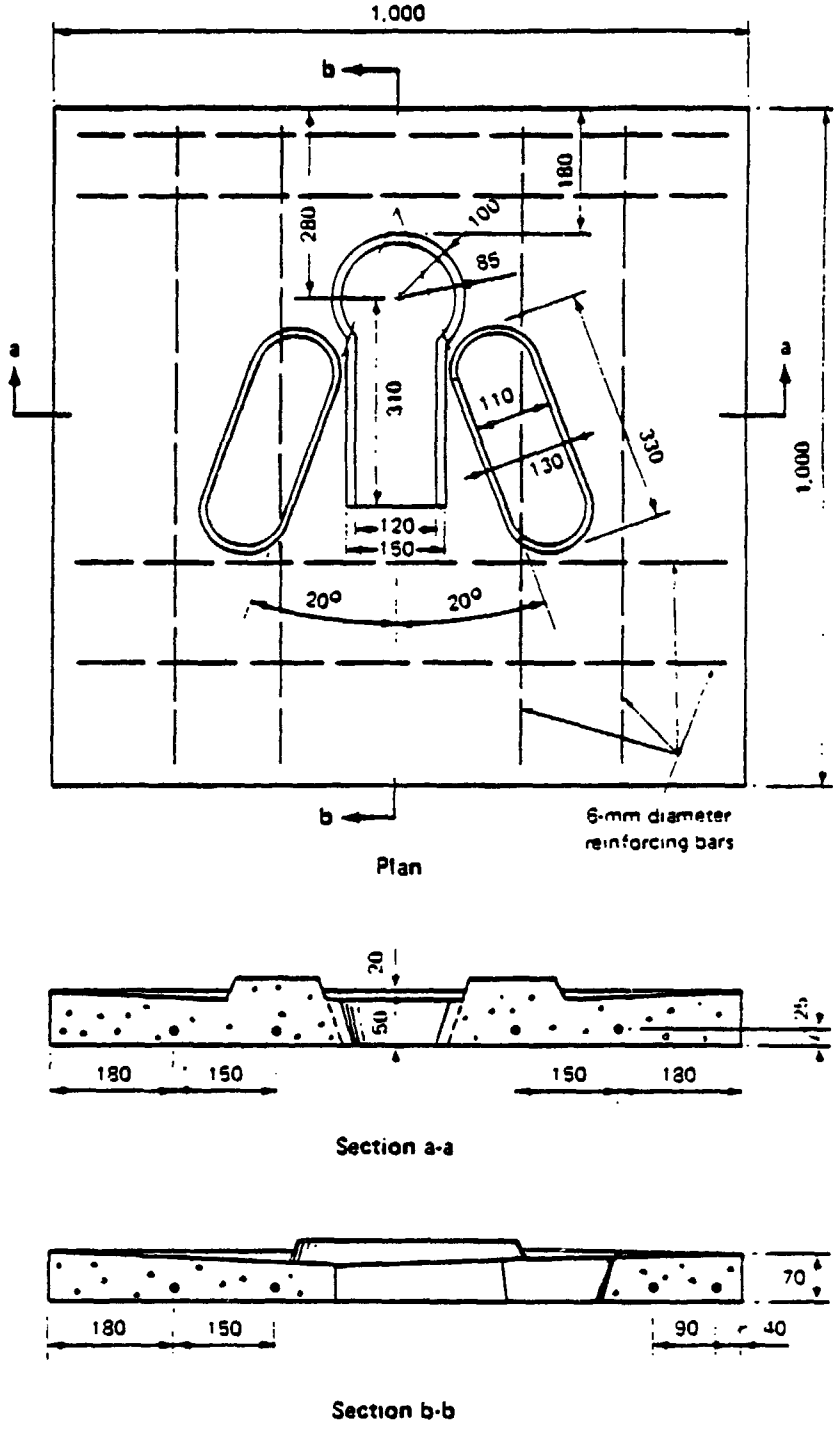

Source: Adapted from Wagner and Landix (1958)

Figure 4--2. Tanzanian "Flap-trap" Design for Ventilated Improved Pit Latrines and Double-vault Composting Toilets (millimeters)

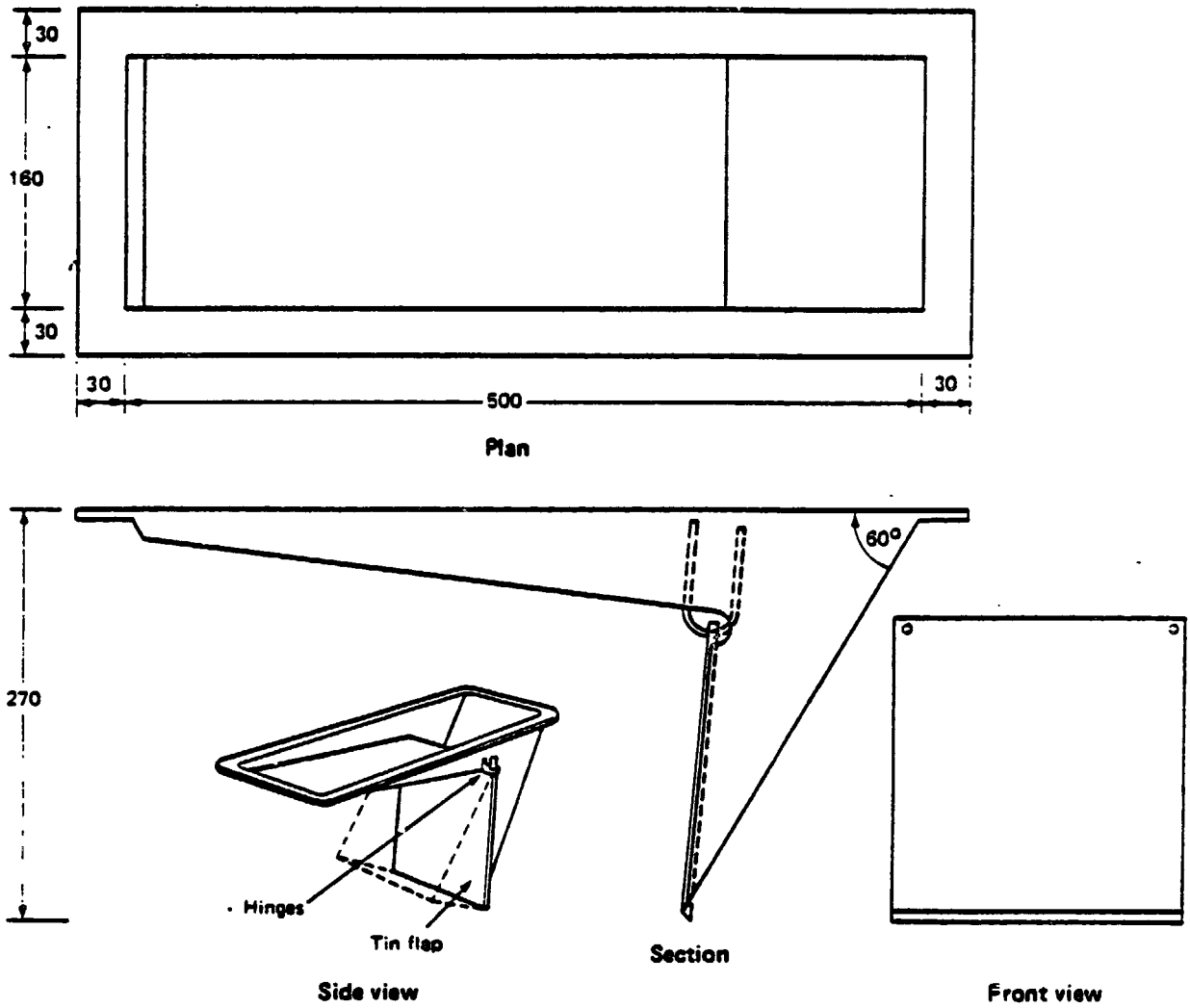

Source: Adapted from a drawing by U. Winblad.

Figure 4 - 3. Pedestal Seats for Dry Latrines and Chute Designs for ROECs

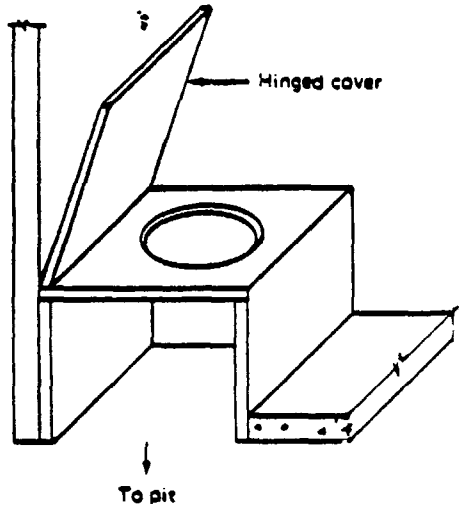

Pit latrine

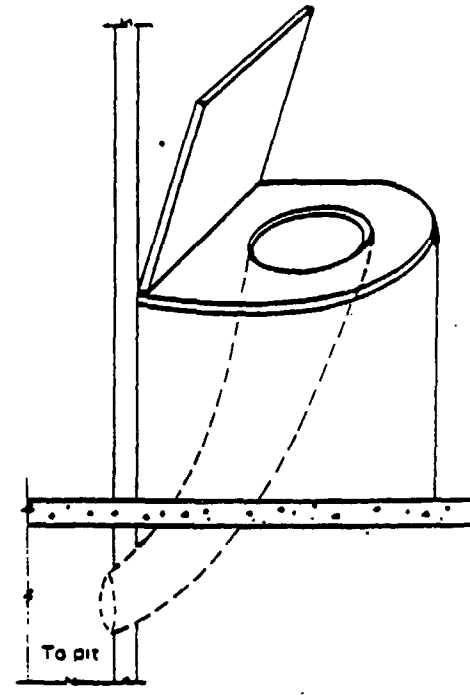

Reed Oderless Earth Closet (ROEC)

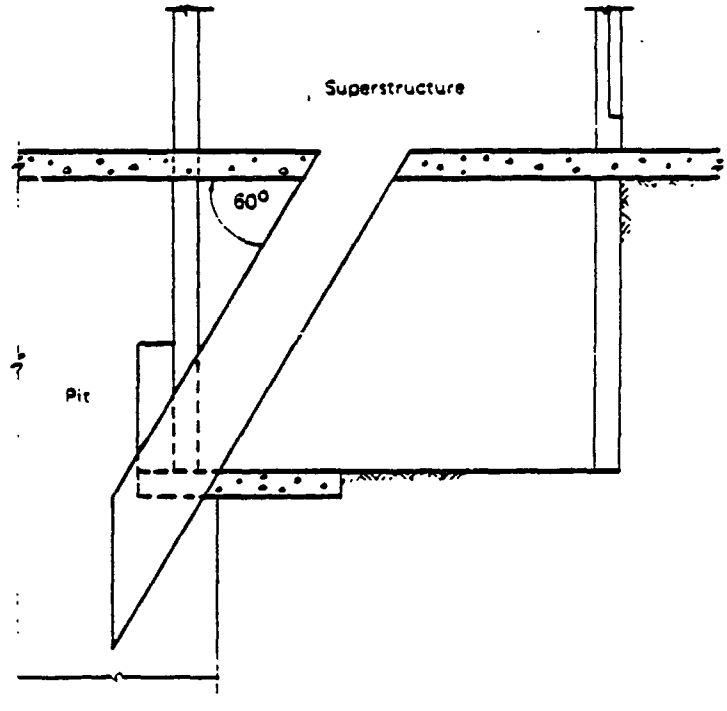

Squatting chute

Note: The pedestal hole should be 100 millimeters in diameter for use by children, 200 millimeters for adults. Unsupported fiberglass should not be used in construction

Figure 4-4. Water-seal Squatting Plate for Pour-flush Toilets Located Immediately above the Pit (millimeters)

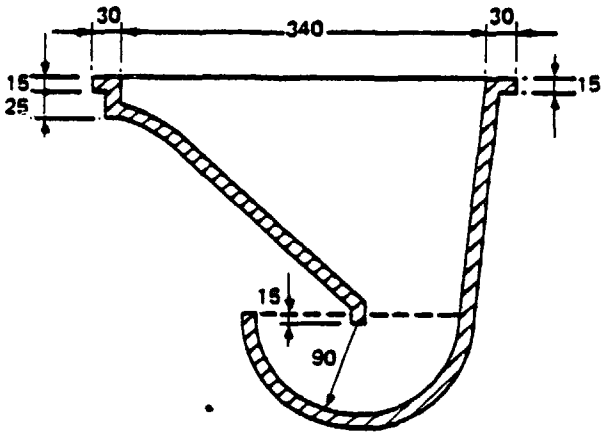

Sectional elevation

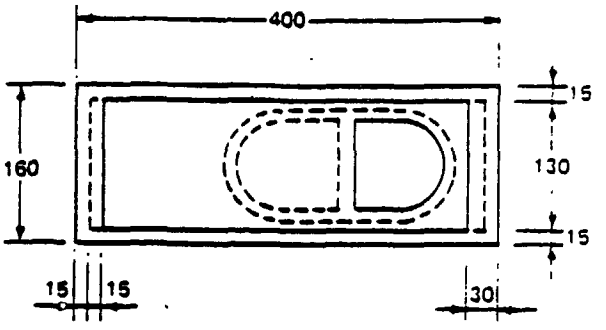

Plan of water seal

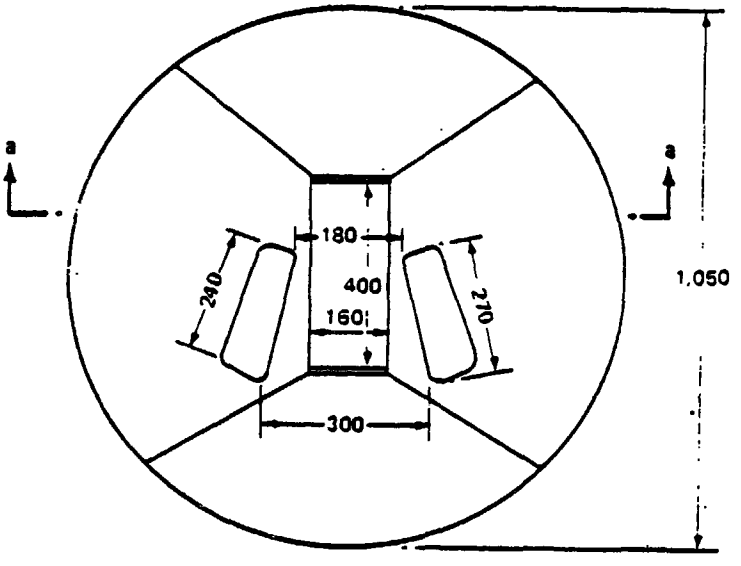

Details of squatting plate

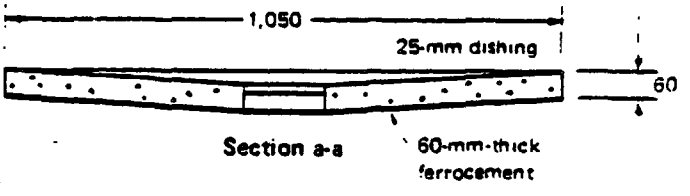

Section a-a

Source Adapted from Wagner and Lanoix (1958).

Figure 4 - 5. Galvanized Sheet-metal Water-seal Unit for Pour-flush Toilets Located Immediately above the Pit (millimeters)

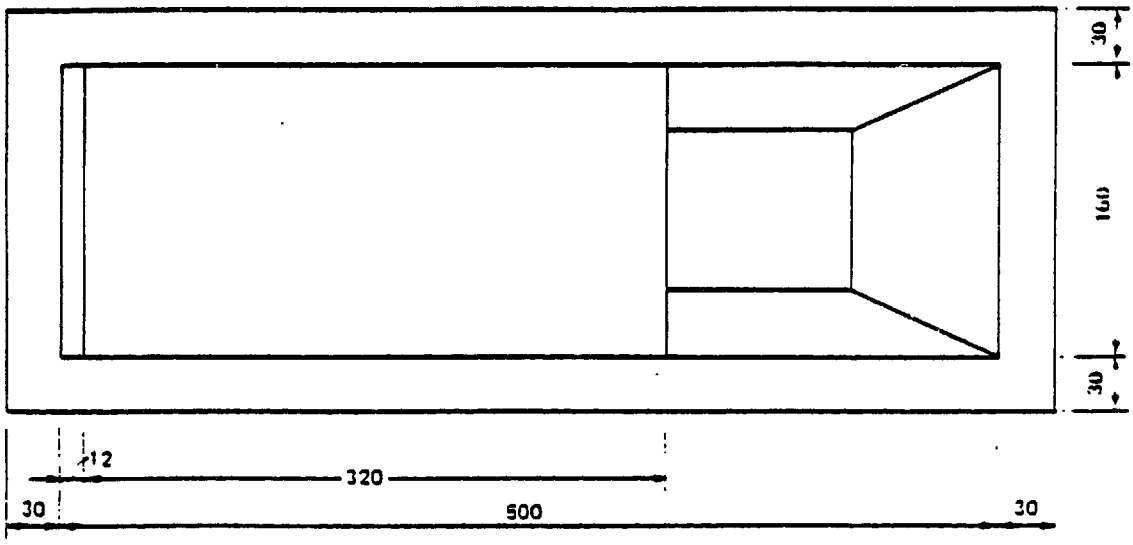

Plan

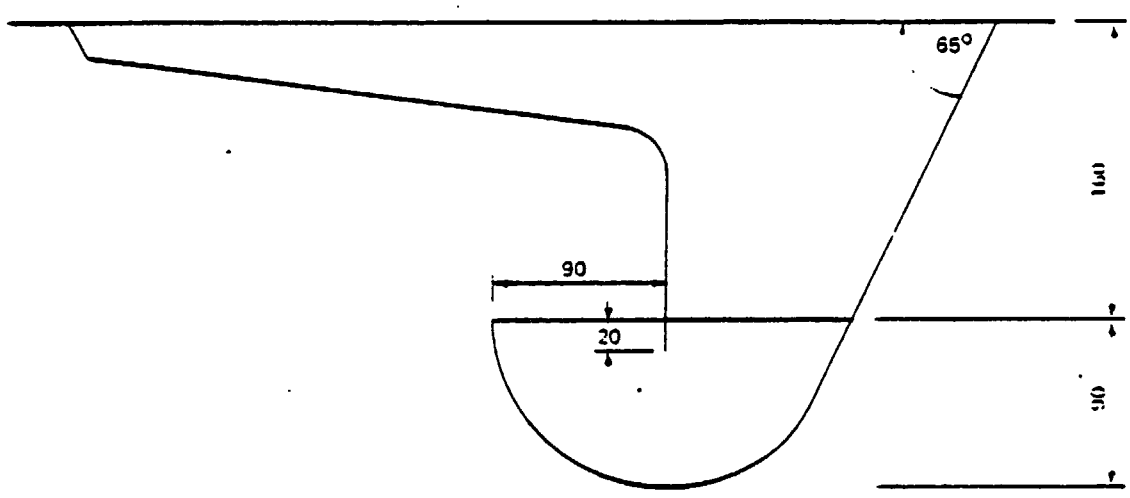

Section

Figure 4--6. Plastic or Fiberglass Water-seal Toilet (millimeters)

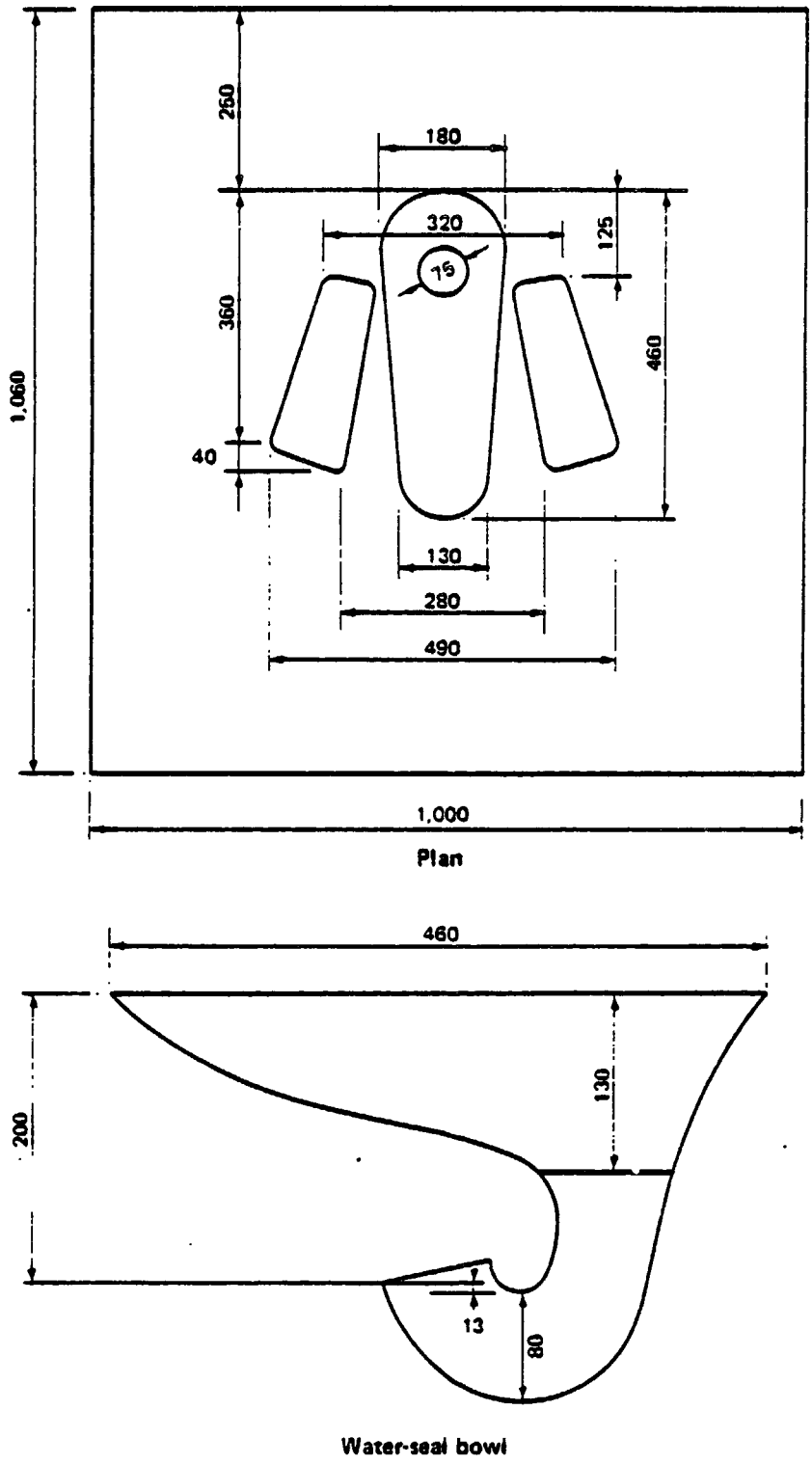

Source. Adapted from Wagner and Lanoix (1958).

CHAPTER 5

VENTILATED IMPROVED PIT (VIP) LATRINES

Conventional pit latrines are the most common sanitation facility used in developing countries. In its simplest form, a pit latrine has three components--namely, a pit, a squatting plate (or seat and riser) and foundation, and a superstructure.

A typical arrangement is shown in Figure 5-1. The pit is simply a hole in the ground into which excreta fall. When the pit is filled to within 1 meter of the surface, the superstructure and squatting plate are removed and the pit filled up with soil. A new pit is then dug nearby.

The simple unimproved pit latrine has two major disadvantages: it usually smells, and flies or mosquitoes readily breed in it, particularly when it is filled to within 1 meter of the surface. These undesirable attributes have led to the rejection of the pit latrine in favor of other, far more expensive forms of sanitation, but they are almost completely absent in ventilated improved pit (VIP) latrines, ventilated improved double-pit (VIDP) latrines, and Reed Odorless Earth Closets (ROECs). It is therefore recommended that unimproved pit latrines of the type shown in Figure 5-1 no longer be built, and that those that do exist should be converted.

VIP Latrines

Recent work has provided designs for pit latrines that are odorless and have minimal fly and mosquito nuisance. VIP latrines (Figure 5-2) are a hygienic, low-cost, and indeed sophisticated form of sanitation, which has only minimal requirements for user care and municipal involvement. The pit is slightly offset to make room for an external vent pipe. The vent pipe should be at least 75 millimeters in diameter (ranging up to 200 millimeters); it should be painted black and located on the sunny side of the latrine superstructure. The air inside the vent pipe will thus heat up and create an updraft with a corresponding downdraft through the squatting plate. Thus any odors emanating from the pit contents are expelled via the vent pipe, leaving the superstructure odor free. The pit may be provided with removable cover sections to allow desludging.

Recent work has indicated that pit ventilation may also have an important role in reducing fly and mosquito breeding. The draft discourages adult flies and mosquitoes from entering and laying eggs. Nevertheless, some eggs will be laid and eventually adults will emerge. If the vent pipe is large enough to let light into the pit, and if the superstructure is sufficiently dark, the adults will try to escape up the vent pipe. The vent pipe, however, is covered by a gauze screen so that the flies are prevented from escaping and they eventually fall back to die in the pit.

Both the vent pipe and the gauze screen must be made from corrosion-resistant materials (e.g, asbestos cement, fiberglass, PVC). Little detailed work has been done on the design of the vent pipe; at present it is recommende that the pipe diameter should be 75 to 200 millimeters and that it should exte 300 millimeters above the roof; this should be increased to 600 millimeters if the pipe cannot be located on the sunny side of the superstructure. Local wind patterns and the diurnal variation in ambient temperatures affect ventilation efficiency; theoretical and field work on these aspects is continuing.

Ventilated Improved Double-Pit Latrine

To eliminate the need to construct very deep pits, to preclude the necessity of constructing another latrine once the pit is full, and to facilitate the emptying of the pit where space for a replacement latrine does not exist, a double-pit latrine should be used. A VIDP latrine differs in design from the VIP only by having two pits (see Figure 5-3). Two pits can be provided by constructing a separation wall in the VIP pit or by constructing two separate pits. Each pi should be designed to have an operating life of at least one year before it is necessary to seal the pit and switch to the second pit. The VIDP superstructure and squatting plate arrangements would be simila to that of the DVC toilet (see chapter 6). Regular VIP squatting plates would be used, however, because the urine separation important for composting is not required in VIDPs.

Operation and maintenance of the VIDP is the same as that of the VIP for pit emptying. With two pits available, one pit would be used until full and then sealed while the second pit is in use. When the latter is almost full, the first pit would be emptied and put back into use once more. By alte nating, the two pits can be used indefinitely. Because of the long residence time (a minimum of one year) of the decomposing excreta in the pit not in use at the time, pathogenic organisms will have been destroyed by the time the pit needs to be emptied. As a consequence, there is no danger of spreading pathogens and the excavated humus-like material can be used as a soil conditioner or disposed of without fear of contamination.

In permeable soil the liquid fraction of the excreta, together with the water used for latrine and personal cleansing, percolates into the soil and so reduces the volume of excreta in the pit. The solid fraction of the excreta is slowly decomposed by anaerobic digestion, and this also reduces the volume of excreta remaining in the pit. Thus the long-term accumulation of solids in the pit is very much less than the total quantity of excreta added. For purposes of design the required capacity of a dry pit should be taken as 0.06 cubic meter per person yearly. In areas where anal cleansing materials that are not readily decomposed (such as grass, leaves, maize, cobs, mud balls, cement bags) are used, this figure should be increased by 50 percent.

VIP latrines, VIDP latrines, and ROECs are designed for use without water, i.e., there is no need to "flush" excreta into the pit. Where flushing is desired, a pour-flush (PF) toilet should be used (see chapter 7) because it is a superior latrine for applications where water is available and the user accustomed to the use of water for flushing and/or anal cleansing.

Pits should be constructed so as not to extend below the water table so the pit remains dry and groundwater contamination is minimized. In areas where the water table is within 1 meter of the ground surface, or where excavation is extremely difficult (as, for example, in rocky ground), a built-up pit can be used, as shown in Figure 5-5. The raised plinth should not be more than 1 meter above ground level and the watertight lining should extend at least 0.5 meter, and preferably 1 meter, below ground level. With a movable superstructure, a long, shallow multiple-chamber pit can be constructed and desludged periodically.

Desludging of pits may be necessary where space is limited; it can be done manually or mechanically, provided adequate precautions are taken to prevent the spread of pathogens. Care must be taken that the emptying methods adopted do not lead to collapse of unlined pit walls (as may happen when high-pressure hydraulic flushing is employed).

ROECs

An alternative design for a VIP latrine is the ROEC, shown in Figure 5-4. In this latrine the pit is completely offset and excreta are introduced into the pit via a chute. A vent pipe is provided, as in the VIP latrine, to minimize fly and odor nuisance. A disadvantage of the ROEC, however, is that the chute is easily fouled with excreta and thus may provide a site for fly breeding; the chute therefore has to be cleaned regularly with a long-handled brush. In spite of this small disadvantage, ROECs are sometimes preferred to VIP latrines for the following reasons:

(1) the pit is larger and thus has a longer life than other shallow pits;

(2) since the pit is completely displaced, the users (particularly children) have no fear of falling into it;

(3) it is not possible to see the excreta in the pit; and

(4) the pit can easily be emptied, so that the superstructure can be a permanent facility.

ROECs have proved extremely satisfactory in southern Africa, where some units have been in continuous use for over 20 years. Recent experiments in Tanzania have also demonstrated their technical and social acceptability.

Pit Design

The volume (V) of pits less than 4 meters deep may be calculated from the equation:

$V = 1.33\ CPN$;

where C = pit design capacity, cubic meter/person per year;

P = number of people using the latrine;

N = number of years the pit is to be used before emptying.

The capacity (C) of dry pit should be 0.6 cubic meter per person per year. Where anal cleansing materials that are not readily decomposed (such as grass, leaves, maize, mud balls, cement bags, etc.) are used, this figure should be increased by 50 percent. For wet pits, the capacity should be 0.04 cubic meter per person per year.

The factor 1.33 is introduced as the pit is filled in with earth or emptied when it is three-quarters full. For the unusual case of pits deeper than 4 meters, V = CPN+1 to allow for filling the upper 1 meter with earth. Where soil conditions permit, large diameter or cross-section pits may be constructed, although special care must be given to supporting the latrine base and superstructure. Some traditional pit designs are shown on Figure 5-5.

VIP and VIDP Latrines. In the case of VIP latrines the pit is around 1 square meter in cross-section and its depth is then readily calculated from the required volume. Depths are usually in the range from 3 to 8 meters although pit depths of 12 meters or more are found where soils are particularly suitable. With VIP latrines, it may be advantageous to use enlarged pits provided the ground conditions are suitable.

The upper part of the pit should be lined so that it can properly support the squatting plate and superstructure. If this is not done, the pit may collapse. In unstable soil conditions it may be necessary to extend this lining down to the bottom of the pit (Figure 5-5), but care must be taken to ensure that the lining does not prevent percolation.

A VIDP latrine differs from a VIP only in that it has two alternating pits. When one is full, the pit should rest at least one year before it is emptied to ensure pathogen destruction--pit depths can be varied to reflect soil condition (i.e., ease of construction) and desired emptying frequency. To facilitate emptying and prevent collapse of the partition wall, however, the pit should not be as deep as that of a VIP.

All pits should be constructed to prevent surface water from entering. This requires grading of the formation to ensure diversion of surface drainage. In cases where the pit is partially offset from the superstructure, it should normally be constructed on the downhill side.

ROECs. These latrines normally have the advantage over VIP latrines that the pit, being completely offset, can be larger and thus lasts longer. The design lifetime should be 15 to 20 years. The width of the pit is generally about 1 meter and, for easy desludging, its depth should not exceed 3 meters; its length can thus be readily calculated from the equation given above (see Figure 5-4).

Borehole latrines. This type of pit latrine is not recommended as a household sanitation facility since it is too small (usually only 400 millimeters in diameter and up to 4 meters deep for hand augers) and cannot be ventilated. Borehole latrines thus have a short lifetime (1 to 2 years) and generally unacceptable levels of fly and odor nuisance. Where mechanical augers are available, greater depths and lifetimes can be provided but ventilation is still a problem (see Figure 5-5).

Material and Labor Requirements

Unskilled labor is required for excavation of the pit, and semi-skilled labor is required for lining the pit, casting the squatting plate, and building the superstructure. Usually the unskilled labor can be provided by the householder, with municipal guidance and inspection.

Material requirements are for the pit lining, the squatting plate, and the superstructure. Although a variety of materials can be used, most commonly brick or concrete blocks are chosen for the lining and superstructure, with corrugated galvanized iron or asbestos-cement sheets and wooden beams for the roof. Other lining materials include closely spaced timber poles, used tires, and fiber mats. The squatting plate is usually made of concrete. All required materials should be locally available. The support for the squatting plate (or pedestal) and superstructure may be provided by lumber beams extending well beyond the pits, by a reinforced concrete slab resting on a competent pit lining, or by a reinforced concrete collar extending, for example, 40 centimeters beyond the wall of an unlined pit.

Complementary Investments

Sullage disposal facilities are required. The precise type of facility depends on the quantity of sullage generated by the household.

Water Requirements

Only minimal volumes of water are required to clean the squatting slab and, if customary, for anal cleansing (though in the latter case a PF unit would be better).

Maintenance Requirements

Pit latrines require good maintenance. This maintenance, however, is of a very simple kind and consists principally of keeping the squatting plate and superstructure clean. To prevent mosquito breeding in wet pits, a cupful of a suitable inhibitor (such as wood ash, lye, used lubricating oil, kerosene, or boron) should be added to the pit each week.

In many parts of the world, pit latrines have become grossly fouled and often constitute a greater health hazard than promiscuous defecation in the garden or alleys. This is not because of any inherent tendency of pit latrines to become fouled, but because they have often been introduced withou sufficient user participation or education into communities that had never previously had any sanitation facility whatsoever. In such communities, othe types of latrines would doubtless be equally fouled.

Since the construction of pit latrines is very simple, it may be largely left to the householders. Municipal responsibilities can thus be restricted to enforcing and assisting in the achievement of building standard and to providing the householders with whatever type of credit or other finan cial assistance is appropriate. It may be necessary for the municipality to establish facilities for the mass production of squatting plates; this may be done either by municipal employees or in the private sector. The municipal authority should also be responsible for ensuring that the latrines are properly used and maintained. It may be necessary to assist householders with redigging or emptying their latrines when full, and detailed arrangements for these services should be worked out at the design stage.

Factors Affecting Suitability

VIP and VIDP latrines and ROECs are suitable in low- and medium-density areas (up to approximately 300 people per hectare). In such areas houses are normally single-storied and there is sufficient space on each plot for at least two pit sites (one in use and the other in reserve). They can be used at much higher densities (500 to 600 people per hectare), however, if the pit volume is increased or if pits and vaults are easily accessible for emptying and if sullage water disposal is properly managed. The VIDP is particularly useful at high densities. All three types of latrine are easy t construct (except in sandy or rocky ground, or when the water table is high), and usually much, if not at all, of the construction can be done by the users The construction materials are standard and none generally has to be speciall imported.

Health Aspects

Provided the squatting plate is kept clean, a VIP latrine or ROEC poses a health risk to the user scarcely greater than does a flush toilet. The only slightly increased risk is that of fly and mosquito breeding. This is most unlikely to be a serious nuisance, however, if the latrine is ke clean, fly-breeding inhibitors are used, the ventilation system is properly designed, and the users keep the slab hole covered.

The pit contents can be safely dug out after they have been sealed in the ground at least 12 months. At most, there will be only a few viable Ascaris ova remaining after this time. If, as is recommended earlier, the pit has a minimum life of 5 years, its contents will not be dug out before at least another 5 years have elapsed (since a second pit will have been in use for that period), and after this time the pit contents will not contain any viable excreted pathogens whatsoever.

Costs

The cost of a VIP or VIDP latrine is composed of the labor required for pit excavation and lining and the purchase and fabrication of the squatting slab, the vent pipe, and the superstructure. For an ROEC the cost of the chute must be added. In most cases the superstructure cost will be the biggest component, amounting to about half of the total. Thus any reduction in superstructure cost through the use of inexpensive local materials or self-help labor will significantly reduce total costs. Similarly, an overdesigned superstructure can increase the cost of a VIP or VIDP latrine or ROEC to the point where it loses its economic advantage over other systems.

The total construction cost of a VIP or VIDP latrine ranges from $50 to $150; the lower figure assumes household labor is used for excavation and building the superstructure. If the ground is rocky or no inexpensive superstructure materials are available the cost may be higher than $150. With a larger pit than that of the VIP latrine and the addition of a chute, an ROEC will cost about $75 to $200 to construct. The operating and maintenance requirements of VIP or VIDP latrines and ROECs are those of cleaning the user area and periodic emptying.

Potential for Upgrading

VIP latrines, VIDP latrines, and ROECs can be easily upgraded to PF toilets. The necessary design modifications are discussed in chapter 2.

Potential for Resource Recovery

VIDP latrines permit waste reuse; when dug out, the well-aged pit contents may be safely used as humus on gardens. The contents of VIP and ROEC pits will, however, contain some fresh excreta and will require treatment (if by composting) before they can be safely used.

Main Advantages and Disadvantages

The main advantages of well-maintained VIP latrines, VIDP latrines, and ROECs are:

(1) lowest annual costs;

(2) ease of construction and maintenance;

(3) all types of anal cleansing materials may be used;

(4) absence of odor nuisance and minimal fly and mosquito nuisance;

(5) minimal water requirements;

(6) low level of municipal involvement;

(7) minimal risks to health; and

(8) good potential for upgrading.

Their main disadvantages are that they are unsuitable for high-density urban areas, they may pollute the groundwater, and that, when full, they must be taken out of service and another unit built (except in the case of VIDP). They can be upgraded to PF toilets if users desire the advantages of a water flushed unit with a water seal. They also require that separate arrangements be made for sullage disposal.

Figure 5 - 1 Conventional Unimproved Pit Latrines (millimeters)

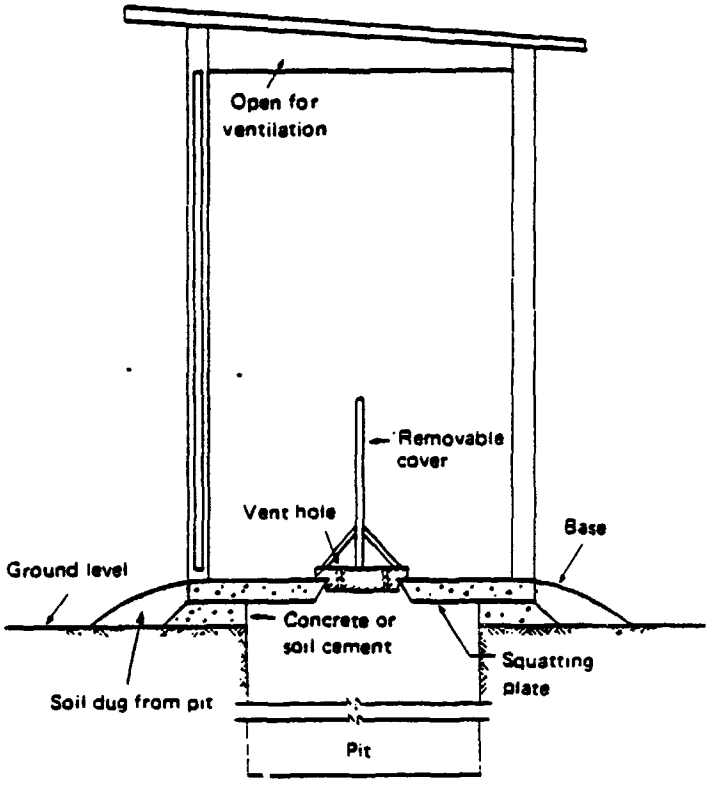

Side view

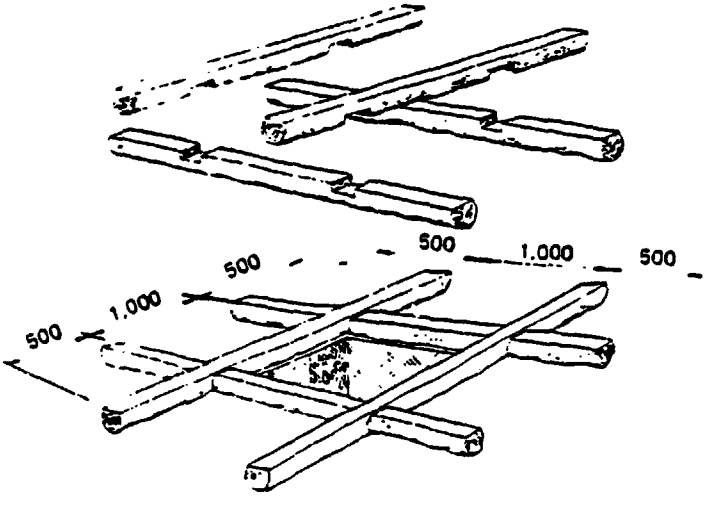

Alternative base using hewn logs

Note In termite-infested areas, use treated wood or termite barrier

Source Adapted from Wagner and Lanoix (1958)

Figure 5 -- 2 Ventilated Improved Pit Latrine (measurements in millimeters) (millimeters)

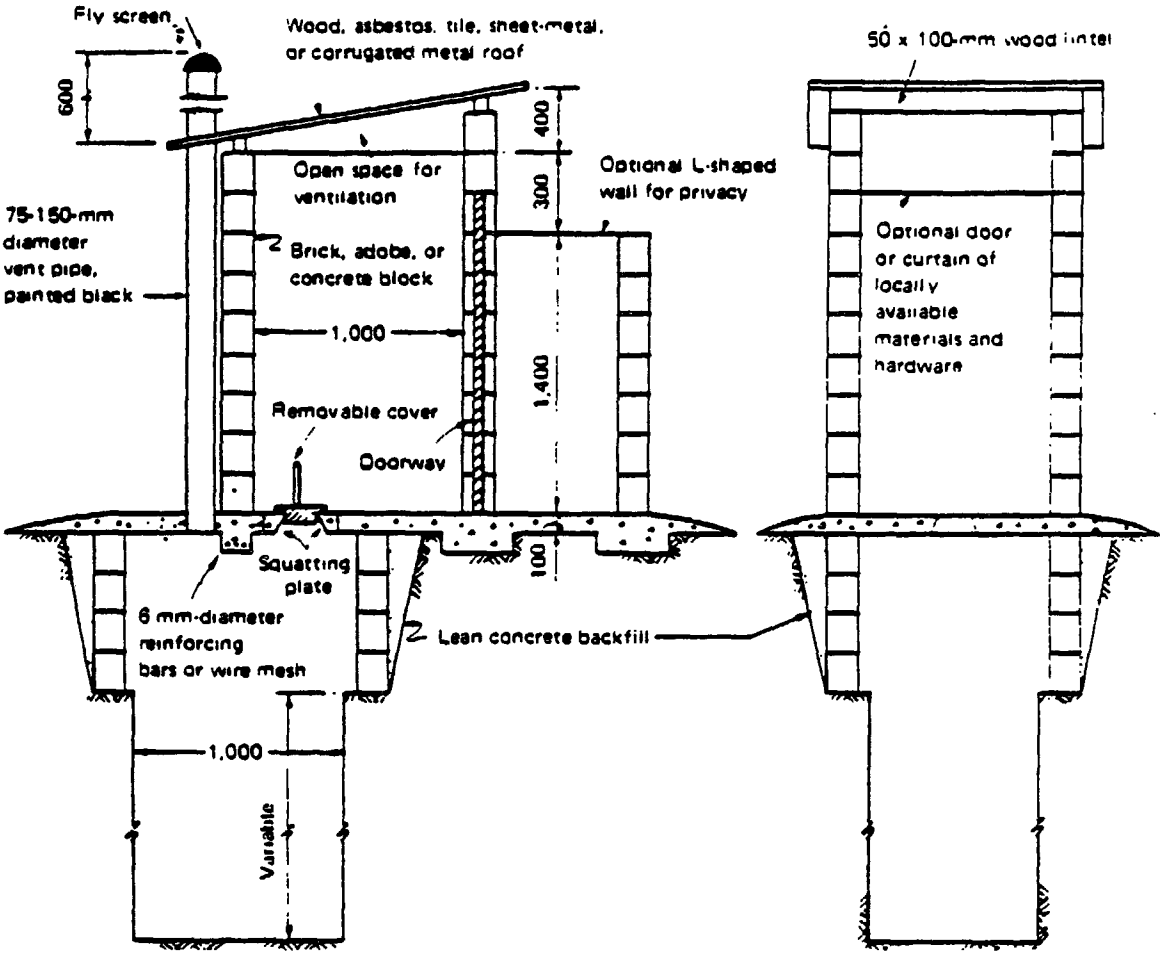

Side view (section)

Front view (superstructure: L-shaped wall and vent not shown)

Note Side view Pedestal seat or bench may be substituted for squatting plate. An opening for desludging may be provided next to vent. Dimensions of the bricks or concrete blocks may vary according to local practice. Wooden beams, flooring, and siding may be substituted for concrete block walls and substructure.

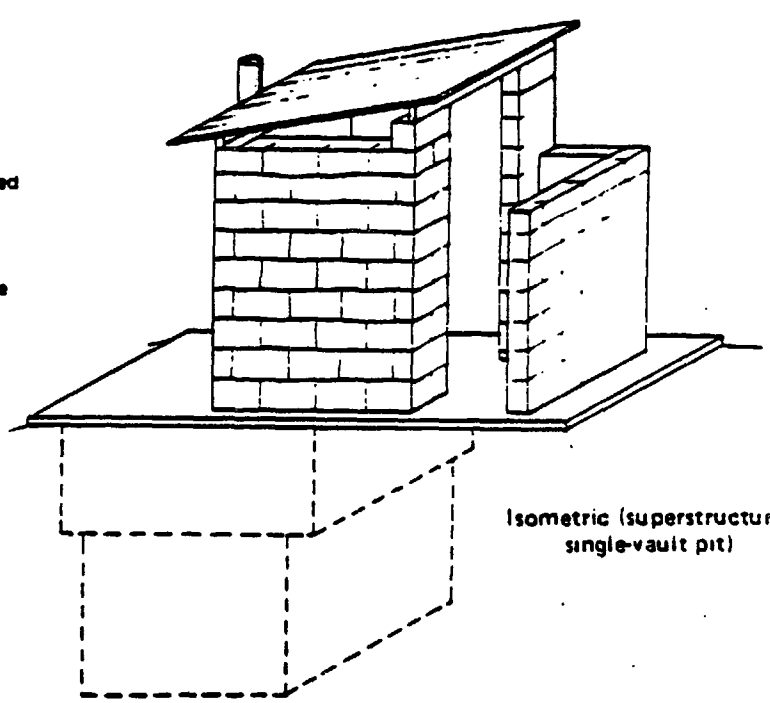

Isometric (superstructure: single-vault pit)

Figure 5 - 3 Ventilated Improved Double-pit Latrine (millimeters)

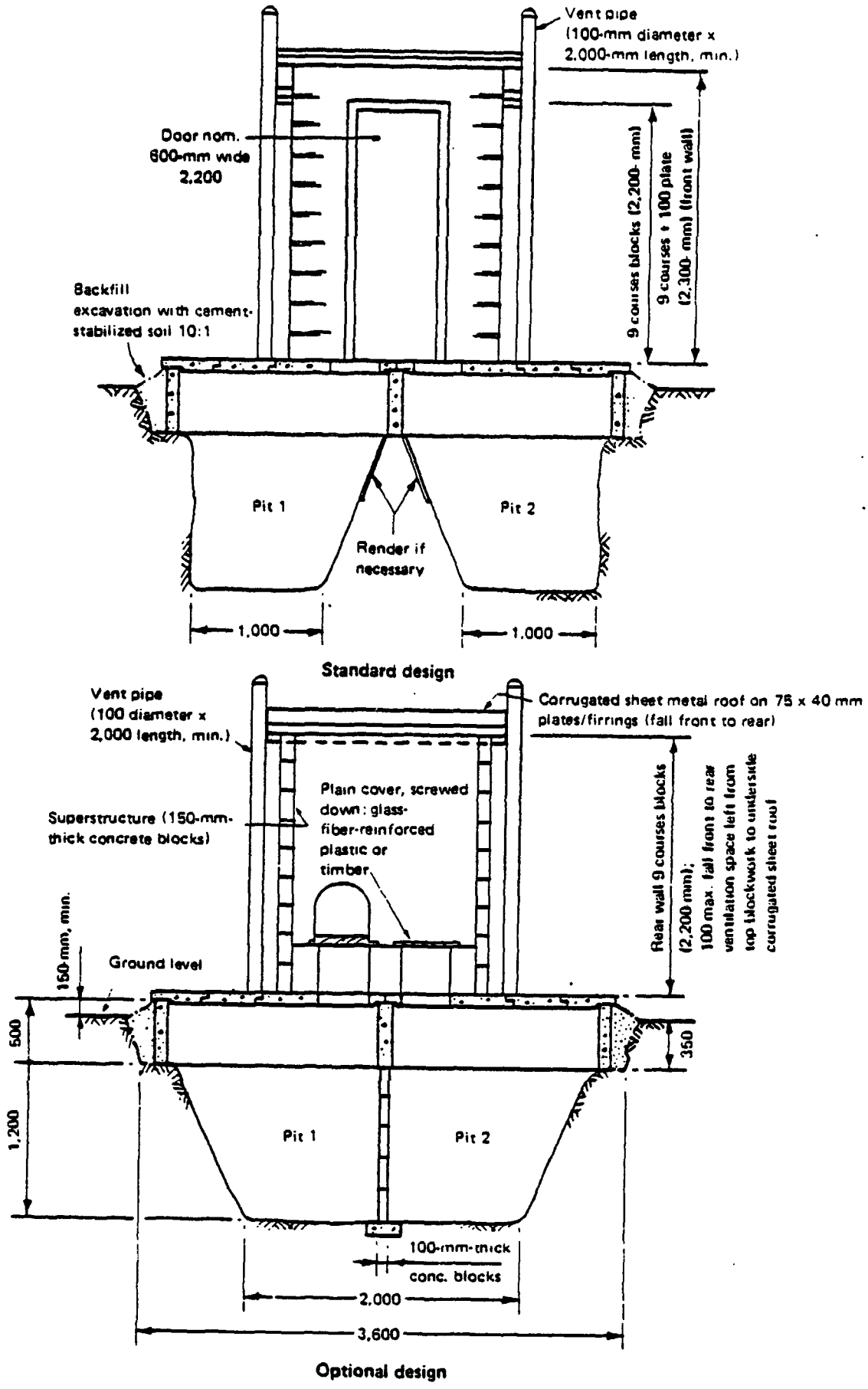

Source: Adapted from R. Carroll (1979).

Figure 5 –4. (continued)
B. Structural details

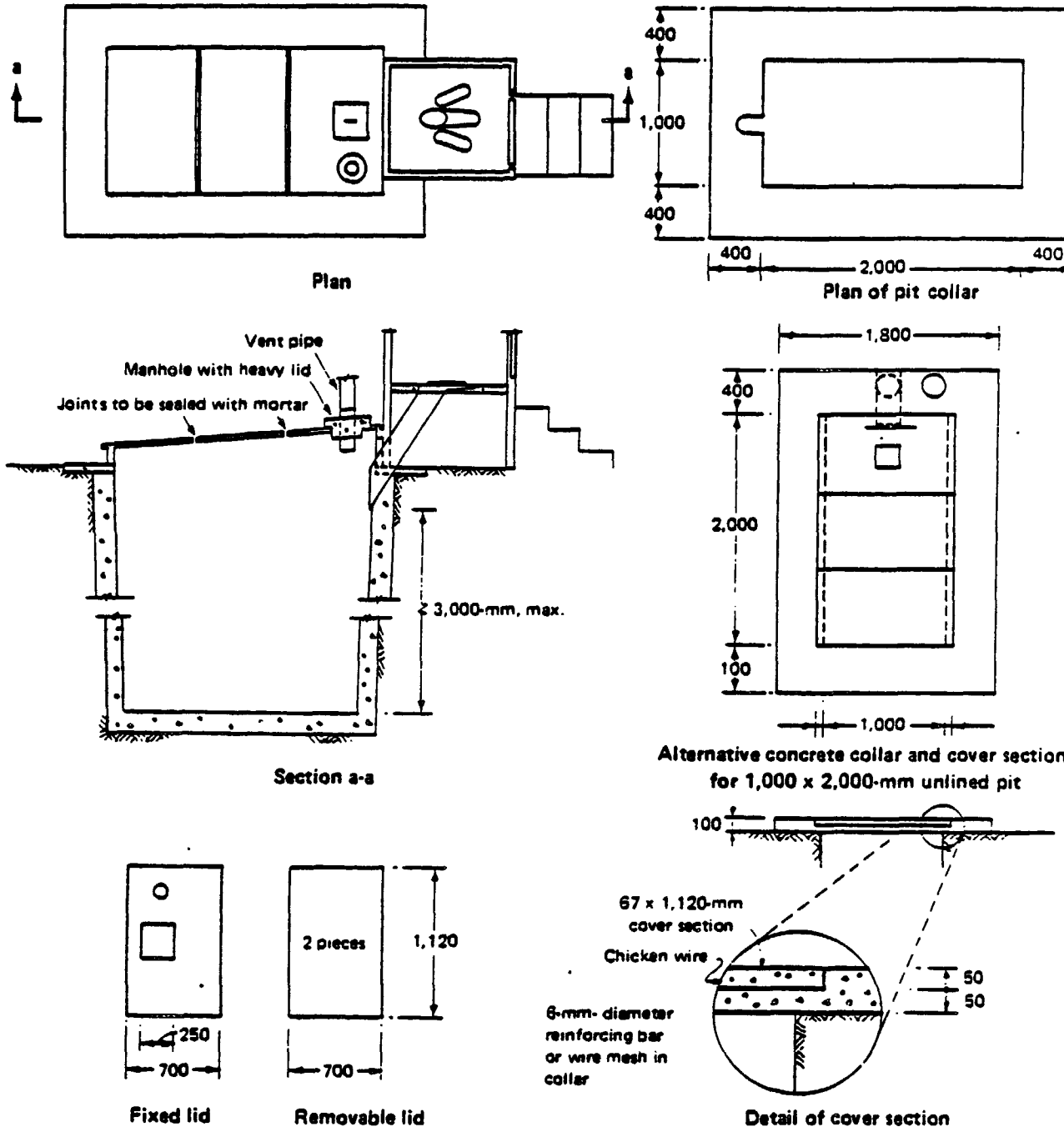

Note: Pedestal seat with curved chute may be substituted for squatting plate. Construction materials and dimensions for superstructure may vary according to local practice. The vent should be placed for maximum exposure to sunlight.

Source. Adapted from Wagner and Lanoix (1958).

Figure 5 – 5. Alternative Pit Designs (millimeters)

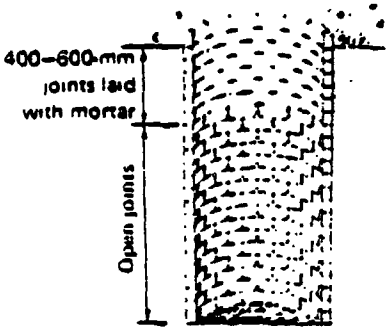

Circular pit with brick lining

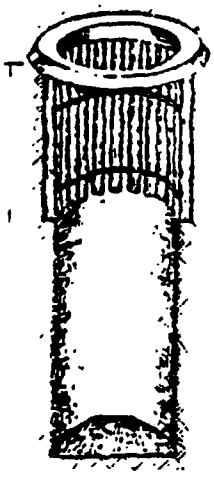

Round pit with partial lining of tree limbs

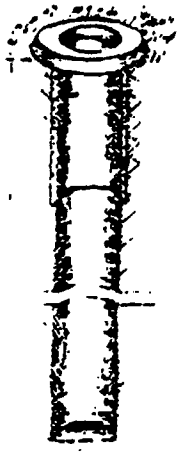

Bored pit with concrete lining

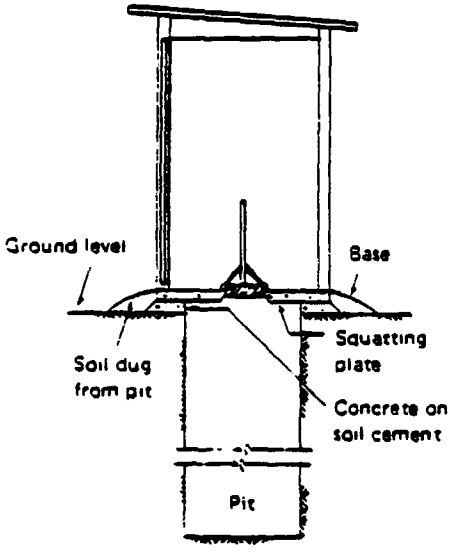

Unlined pit

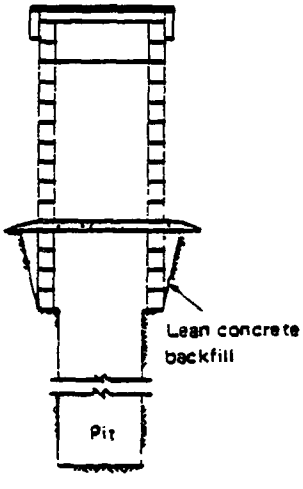

Square pit with partial concrete-block lining

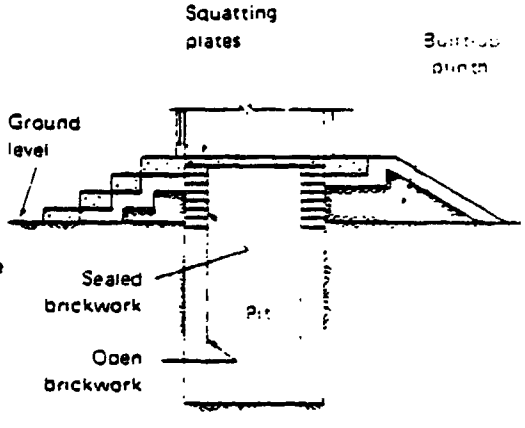

Raised pit latrine for use in areas of high groundwater table

Source: Top, adapted from Wagner and Lanoix (1958); bottom, World Bank.

CHAPTER 6

COMPOSTING TOILETS

Household systems for composting night soil and other organic materials are used under a variety of conditions. They are successful in both developing and industrial countries when they receive a high degree of user care and attention. This is most likely to occur when there is an urgent need for fertilizer or when there is a high degree of environmental concern. There are two types of systems, continuous and batch.

Continuous Composting Toilets

Continuous composting toilets are developments of a Swedish design known as a "multrum" (see Figure 6-1). The composting chamber, which is situated immediately below the squatting plate, has a sloping floor above which are suspended inverted U- or V-shaped channels. Grass, straw ash, sawdust, and easily biodegradable household refuse as well as excreta are added to the composting chamber. In some designs air from the outside enters by means of suspended channels, which is said to promote aerobic conditions in the composting chamber. The composting material slowly moves down the chamber and into a humus vault, from which it must be regularly removed. The moisture content of the composting material and the humus should be 40 to 60 percent, and the added organic matter acts both to absorb urine and the water used for latrine and anal cleansing and to achieve a carbon:nitrogen ratio in the range of about 20:1 to 30:1. The bulky nature of grass and straw also helps to promote aerobic conditions.

If the temperature in the composting chamber could be raised by bacterial activity to above 60 C^{o}, the survival of excreted pathogens would be zero, with even Ascaris ova being totally eliminated. Recent field trials of continuous composting toilets in Tanzania and Botswana, however, have shown that the rise in temperature is only a few degrees above ambient, indicating that in practice the composting process is not aerobic. In these trials continuous composters were found to be extremely sensitive to the degree of user care: the humus has to be removed at the correct rate, organic matter has to be added in the correct quantities, and only a minimum of liquid can be added. Even with the required sophisticated level of user care, short circuiting may still occur within the system, and viable excreted pathogens can be washed down into the humus chamber. The results of these field trials indicate that continuous composting toilets are presently not suitable for use in developing countries.

Batch Composting Toilets

Double vault composting (DVC) toilets are the most common type of batch composting toilet. Designs are shown in Figures 6-2 and 6-3. The design details, such as fixed or movable superstructures, vary, but all DVC

toilets have certain design principles and operational requirements in common There are two adjacent vaults, one of which is used until it is about three-quarters full, when it is filled with ea . and sealed, and the other vault is then used. Ash and biodegradable organic matter are added to the vault absorb odors and moisture. If ash or organic matter is not added, the toil acts either as a VIP latrine, if it is unsealed, or as a vault toilet, if i sealed. When the second vault is filled and sealed, the contents of the fi vault are removed and it is put into service again. The composting process takes place anaerobically and requires approximately one year to make the compost microbiologically safe for use as a soil fertilizer.

To produce good composted humus, the optimum moisture content in t vault should be between 40 and 60 percent. This can be achieved in several ways. In the Vietnamese DVC toilet (Figure 6-2) urine is excluded from the vault and either drained to a small gravel soakaway or collected for use as nitogenous liquid fertilizer. This is unlikely to be acceptable in areas where the prevalence of urinary shistosomiasis is high. In the Botswanan a Tanzanian DVC toilets (see Figure 6-3) the base of the vault is permeable, permitting infiltration and percolation of urine and water; clearly this approach is not applicable in areas where there is a high groundwater table In this situation the vault must be completely sealed and moisture control depends on the correct addition of absorbent materials such as grass, sawdu and ashes. The addition of ashes also helps to make the excreta alkaline a so aids the composting process. The moisture problem is exacerbated in are where water is used for anal cleansing.

It is important to ensure that only one vault is used at a time. Presumably in the case of the Vietnamese DVC toilet, which is provided with two squatting plates, this has been achieved by a vigorous user education program. In parts of the world where there are cultural preferences or obligations for one or more members of a household to use a separate toilet from other members, however, several squatting plate locations are indicate In the Tanzanian DVC toilet one squatting plate and a continuous slab are provided within a single superstructure, their positions being interchanged necessary. In the Botswanan design both the squatting plate and the superstructure are moved into position over the vault in use, while the other is covered by a concrete slab.

Vault Design

Suitable superstructure and squatting plate designs are given in chapters 3 and 4. DVC toilets should be ventilated in the same way as VIP latrines (chapter 5). The correct sizing of the vaults is more difficult, since there is little information available. In Vietnam the volume of each vault is approximately 0.3 cubic meter; it is used by a family of five to ten for 2 months. This is equivalent to a minimum design capacity of 0.18 cubic meter per person per year. In Tanzania the volume of each vault of experimental DVC toilets was 0.6 cubic meter, which served a family of four to six for 6 months, equivalent to a minimum design capacity of 0.2 cubic meter per person per year. The recommended design for future installations

of DVC toilets in Tanzania, however, has a working volume of 0.88 cubic meter per vault, equivalent to a design capacity of 0.3 cubic meter per person yearly if it is to serve a family of six for 6 months.

Alternatively, in areas with a high water table, a series of shallow vaults may be constructed (on a plinth, if necessary), over which a portable superstructure may be moved on a schedule that insures that excreta remains sealed for at least one year before being removed and used.

The destruction of all excreted pathogens cannot be expected to occur within 6 months at vault temperatures below 40°C. If the alternating cycle of vault usage is increased to 1 year, then only a few viable Ascaris ova will remain. It is therefore recommended that the vault cycle be taken as 1 year and the design capacity as 0.3 cubic meter per person yearly. Then the vault volume V (cubic meters) is given by the equation:

$$V = (1.33)\ (0.3)\ P,$$

$$= 0.4\ P,$$

where P is the number of people using the toilet. The factor 1.33 is introduced since the vault is taken out of service when it is three-quarters full.

Material and Labor Requirements

Construction material and labor requirements are generally comparable to those for VIP latrines and ROECs, providing special care is given to making the vaults waterproof. Separate urine channels may be needed to improve nitrogen recovery, reduce supplemental carbon requirements, and reduce moisture content.

Complementary Investments

Sullage disposal facilities are required.

Water Requirements

A small quantity of water is required to clean the squatting plate. Only the absolute minimum of water should be added to DVC toilets.

Maintenance Requirements

Batch composting or DVC toilets require great user care and maintenance. Ash and easily biodegradable organic wastes such as sawdust, grass, and vegetable wastes must be regularly added in the correct quantities to maintain a suitable carbon-nitrogen ratio in the composting material. Where such material is not easily available (due to changes in household customs, such as cooking with gas rather than wood, which eliminates the availability of ash), composting toilets are not recommended. Care must be taken to exclude water. Finally the vaults must be properly sealed with earth when they are three-quarters full, the other vault emptied and put into service, and its contents reused on the land.

DVC toilets are relatively easy to build on a self-help basis, and municipal authorities are generally only required to supervise their design and construction and to organize appropriate forms of credit for the smallholder. A continuing long-term and vigorous program of user education, however, will normally be necessary in order to ensure that DVC toilets are used correctly.

Factors Affecting Suitability

DVC toilets are not suitable in areas where:

(1) sufficient user care cannot be reasonably expected;

(2) there is insufficient organic waste material available;

(3) the users are unwilling to handle the composted humus; and

(4) there is no local use or market for the humus produced.

In high-density areas DVC toilets may be unsuitable because it is highly unlikely that the users will be motivated to produce good humus for agricultural use, and in any case they are unlikely to have sufficient waste material to regulate the moisture and carbon content of the vault contents.

Health Aspects

Vault ventilation reduces odor and fly nuisance, and if the squatting plate is kept clean, DVC toilets do not pose significant risks to health. Provided each vault can store excreta for 1 year, the composted humus can be safely handled and used on the land because only a few viable *Ascaris* ova will be present.

Costs

The total cost of DVC toilets built as part of pilot projects in Africa ranged from $150 to over $550. It is likely, however, that a typical DVC toilet with a modest superstructure could be built for $100 to $300. Operating and maintenance costs would be negligible if the household removed the compost for its own use. If the municipality collected the compost and transported it for use, the operating costs could be significant.

Potential for Upgrading

There is usually no need to upgrade DVC toilets. They can, however be converted to PF toilets if desired and if the soil is sufficiently permeable. Their conversion to sewered PF toilets is straightforward since they have two vaults, one of which can be used for excreta and the other for

sullage. This conversion is especially attractive (indeed may be necessary) if the housing density increases substantially so that the land available to the householders on which they can be reuse their excreta decreases and on-site sullage disposal is no longer possible.

Potential for Resource Recovery

DVC toilets are specifically designed for resource recovery.

Main Advantages and Disadvantages

DVC toilets have the following advantages:

(1) the production of a stable, safe humus; and

(2) minimal water requirements.

They have the following disadvantages:

(1) an extremely high degree of user care and motivation is required for satisfactory operation;

(2) substantial quantities of biodegradable organic matter must be locally available; and

(3) they are unsuitable for high-density areas.

Except in societies where there is a tradition of reusing excreta in agriculture, DVC toilets have no advantages, and in fact have major disadvantages, over other forms of sanitation, and VIP latrines in particular.

Figure 6 –1 "Multrum" Continuous-composting Toilet

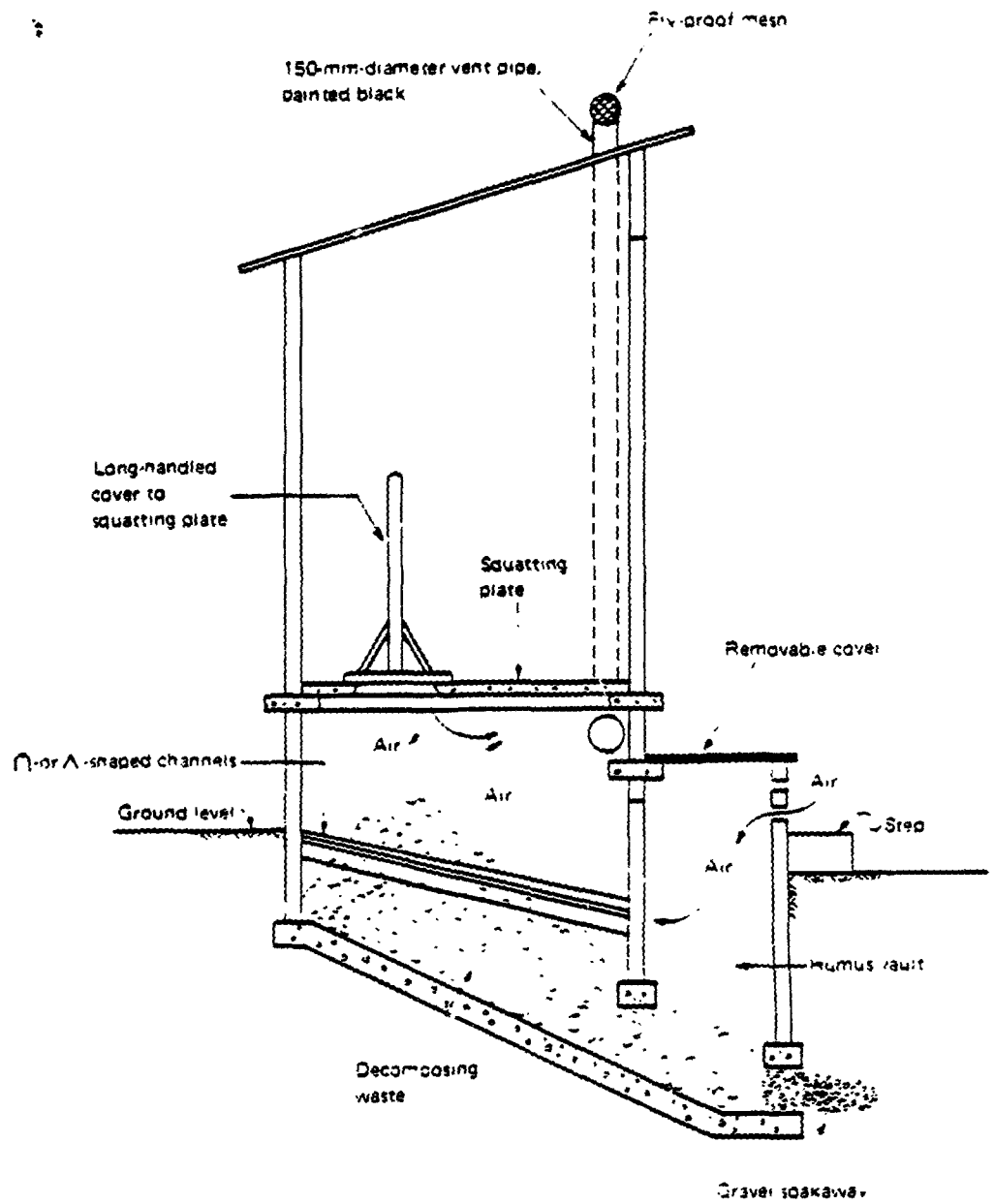

Source Adapted from a drawing by U. Winblad

Figure 6 -2. Double-vault Composting Toilet Used in Vietnam (millimeters)

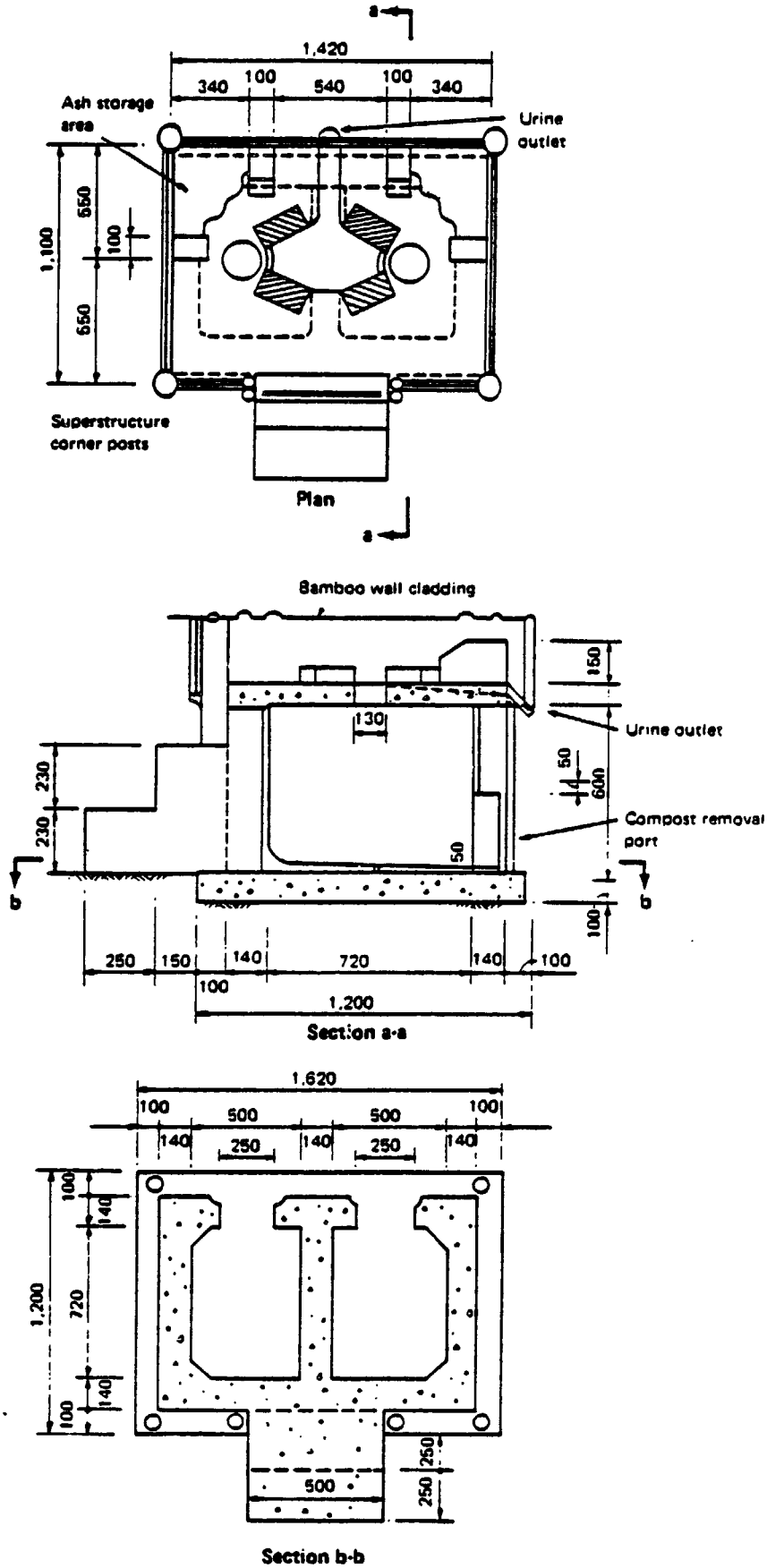

Figure 6 - 3 Double-vault Composting Toilets (millimeters)

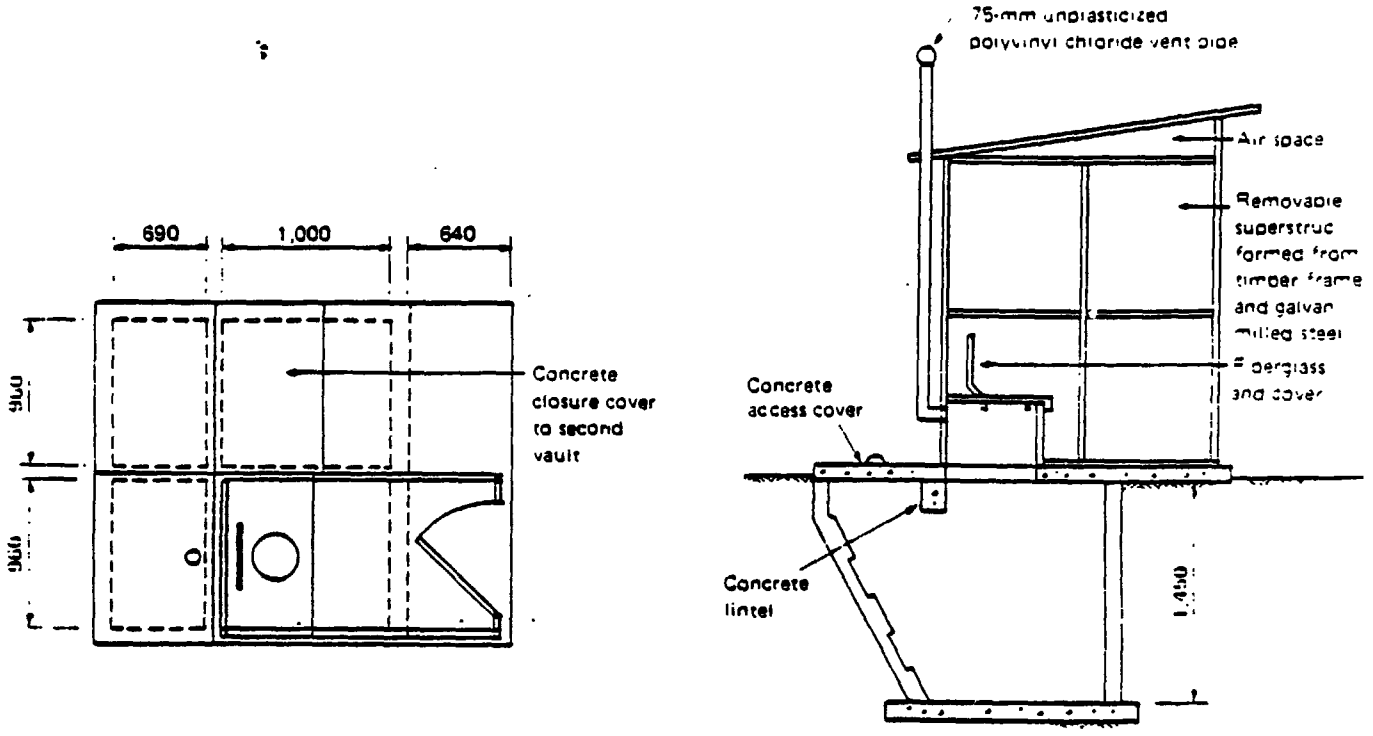

Plan

Section

Model used in Botswana

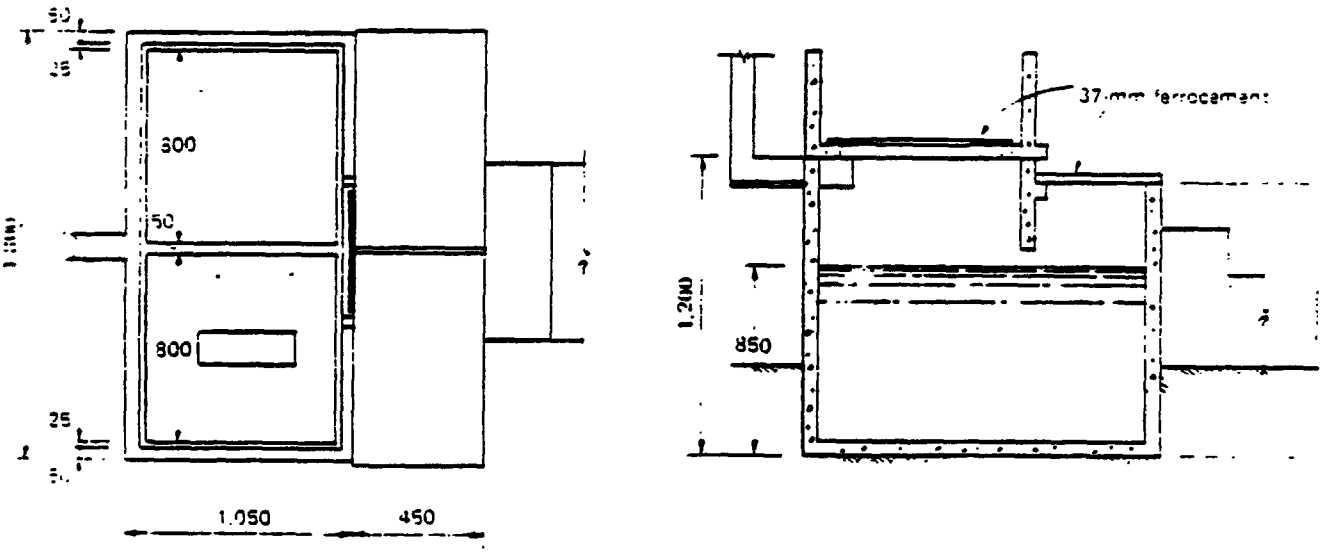

Plan

Section

Model used in Tanzania

... by R A Boydell

CHAPTER 7

POUR-FLUSH TOILETS

Pour-flush (PF) toilets have water seals beneath the squatting plate or pedestal seat and are available in many different designs. Two basic types are shown on Figure 7-1: the direct discharged and the offset pit design. They can be used for several sanitation service levels. The first type is a modification of the pit latrine in which the squatting plate is provided with a simple water seal. Approximately 1 to 2 liters of water (or sullage) are poured in by hand to flush the excreta into the pit. This type of PF toilet is often used with wet pits since the water seal prevents odor development and mosquito breeding. It is especially suitable where water is used for anal cleansing.

The second type of PF toilet, which is widely used in India, southeast Asia, and some parts of Latin America, is used in combination with a completely offset pit. The PF bowl is connected to a short length (8 meters maximum) of 100-millimeter diameter pipe that discharges into an adjacent pit. Approximately 1 to 2 liters of water are required for each flush. The slope of the connecting pipe should not be less than 1 in 40.

The pit is designed as described for wet pits for VIP latrines in chapter 5 and provided with a concrete or ferrocement cover slab and wall lining as necessary.

Because the digestion of excreta solids proceeds more rapidly in wet than in dry pits, however, a design capacity of 0.04 cubic meter per person yearly can be used. The volume (V) of pits less than 4 meters deep may be calculated from the equation:

$$V = 1.33\ CPN,$$

where C = pit design capacity, cubic meter per person yearly (or 0.06 for day pits); P = number of people using the latrine; and N = number of years the pit is to be used.

This type of PF toilet may be installed inside the house since it is free from both odors and fly and mosquito nuisance; it therefore obviates the need for a separate external superstructure, and it can thus meet social aspirations for an "inside" toilet at low cost. Wherever space permits, two pits should be built. Then, when the first pit is full, the PF unit can be connected to the second pit. When the second pit is nearly full the first one can be emptied and the toilet connected to it. A PF toilet with alternating pits can be used almost indefinitely.

The second type of PF toilet can also be connected to a septic tank (see chapter 9) and hence to a soakaway drainfield or sewer as shown in Figure 7-2.

Material and Labor Requirements

Alternative designs for superstructures and squatting plates are presented in chapters 3 and 4. Designs for pits and soakaways are discussed in chapters 5 and 9. Material and labor requirements for PF toilets shown in Figure 7-1 are similar to those for VIP latrines and ROECs (Figures 5-2 and 5-4). Rather more skill, however, is required to make the water seal units, and this would normally be beyond the scope of individual householders on a self-help basis. The manufacture of water seal units is, however, with experience, not a difficult task and one that readily lends itself to local enterprise. In areas where sitting is the preferred position for defecation, the "Colombian" pedestal is suitable (see chapter 4); this too, is readily amenable to local enterprise.

Complementary Investments

Sullage disposal facilities are required for the nonsewered PF toilet.

Water Requirements

Assuming that flushing only takes place when stools are passed and that a maximum of three stools are passed per person daily, the maximum water requirement is 6 liters per capita daily.

Maintenance Requirements

The householder is required to ensure an adequate supply of flushing water throughout the year. Otherwise the maintenance requirements are as described for VIP latrines.

Factors Affecting Suitability

In general PF toilets are subject to the same constraints as VIP latrines and ROECs. They have the additional constraint of a water requirement of 3 to 6 liters per capita daily.

Health

If properly used and maintained, toilets are free from fly and mosquito nuisance and provide health benefits similar to cistern-flush toilets.

Costs

The cost of the PF toilet is similar to that the VIP latrine or ROEC with the addition of the water seal unit. Thus its total construction cost

---

1. The magnitude of cost savings is largely controlled by one site gradient. The sewered PF system is most advantageous in flat areas that would necessitate deep excavation and pumping stations for conventional sewerage.

should be in the range of $75 to $225. Maintenance costs of the system would be minimal, but flushing water requirements would probably add $3 to $5 per year for the household in water-scarce areas.

Potential for Upgrading

PF toilets can be easily upgraded to a low-cost sewerage system that also accepts sullage. The necessary design modifications are discussed below. Since the manual PF system can also be eventually replaced by a low-volume, cistern-flush unit, PF toilets can be fully upgraded to sewered cistern-flush toilets. The drainage arrangements are different from those for conventional sewered cistern-flush toilets, but the differences are of no importance to the users who perceive only that they have a cistern-flush toilet.

Potential for Resource Recovery

The pit contents may be used as humus, as described for the VIP latrine. If only one pit is used, however, the material removed from it should be treated before reuse by aerobic composting or by storage (e.g., burial) for at least 12 months in order to reduce the health risks to an acceptable level.

Main Advantages and Disadvantages

The main advantages of unsewered PF toilets are as follows:

(1) possible location inside the house;

(2) no odor or fly and mosquito breeding;

(3) minimal risks to health;

(4) low level of municipal involvement;

(5) low annual costs;

(6) ease of construction and maintenance; and

(7) very high potential for upgrading.

Their main disadvantages are that they require small but nonetheless significant amounts of water (3 to 6 liters per capita daily) and that, when filled, the pit must be emptied or taken out of service and a new one built. They also require separate sullage disposal facilities. They do not accept large bulky items (such as corncobs, mud balls, and the like) used for anal cleansing so that user cooperation and instruction are required in some areas.

Sewered PF Systems

The sewered PF system is a conceptual development of the sewered aquaprivy system that not only overcomes certain drawbacks inherent in the design concept of the latter while retaining its inherent economic advantages (see chapter 8), but also provides a more technically appropriate sanitation system in areas where the wastewater flow exceeds the absorptive capacity of the soil (see chapter 9). The sewered PF system can either be developed from an existing PF pit latrine or it can be installed as a new facility. There are minor technical differences between these alternatives and only the latter will be considered in this section.

The sewered PF toilet system has five parts:

(1) the PF bowl, with a vent pipe and inspection chamber;

(2) a short length (8 meters maximum) of 100-millimeter pipe laid at not less than 1 in 40;

(3) a small two-compartment septic tank;

(4) a network of small-bore sewers; and

(5) a sewage treatment facility.

A typical arrangement is shown in diagrammatic form in Figure 7-2. Only excreta and PF water are discharged into the first compartment of the septic tank and only sullage into the second. The two compartments are interconnected by a double T-junction, the invert of which is a nominal 30 millimeters above the invert of the exit pipe of the second compartment, which is connected to the street sewer. Thus the contents of the first compartment are able to overflow into the second, but sullage cannot enter the first compartment. This arrangement effectively eliminates the very high degree of hydraulic disturbance caused by high sullage flows that, in single-compartment tanks, would resuspend and prematurely flush out some of the settled excreta; it thus permits a considerably higher retention time of excreta in the tank and hence is able to achieve a substantially increased destruction of excreted pathogens.

Guidelines for the size of the two-compartment septic tanks may be developed as follows. Assuming a per capita daily production of excreta of 1.5 liters and a maximum pour-flush water usage of 6 liters per capita daily, the maximum toilet wastewater flow amounts to 7.5 liters per capita daily. Allowing a mean hydraulic residence time of 20 days in the first compartment implies a volume requirement of 0.15 cubic meter per user, which compares well with the recommendation of the first compartment should be calculated on the basis of 0.15 cubic meter per user, subject to a minimum of 1 cubic meter. 1/ The minimum recommended size tank (1.5-cubic-meter working volume)

---

1. The flow into the second compartment is the sullage flow and the overflow from the first compartment, or, the total wastewater flow.

is thus suitable for up to seven users and a water consumption of 140 liters per capita daily. Desludging of the septic tank is required when the first compartment is half full of sludge, which occurs every 22 months assuming a sludge accumulation rate of 0.04 cubic meter per person yearly and a capacity of 0.15 cubic meter per user.

Since all but the smallest solids are retained in the septic tank, it is not necessary to ensure self-cleansing velocities of 1 meter per second in the receiving sewers. Small-bore sewers of 100- to 150-millimeter diameter can be used and these can be laid at flat gradients of 1 in 150 to 300. Sullage water ordinarily carries no solids that could clog sewer pipes. Consequently, manholes need only be provided at pipe junctions. Thus the sewered PF system achieves considerable economies in pipe and excavation cost compared with a conventional sewerage system. Taking into account these savings, the extra cost of the small septic tank, the savings in water usage, and the lower cost of the toilet fixtures, the annual economic cost of a sewered PF system can be expected to be considerably less than that of cistern-flush toilets connected to a conventional sewerage system. 1/ In addition, treatment costs will be less because of the enhanced pathogen removal and biochemical oxygen demand (BOD) reduction (approximately 30 to 50 percent) in the septic tank.

The design of small-bore sewers is discussed in Volume 2, "A Planner's Guide".

---

1. The magnitude of cost savings is very largely controlled by one site gradient. The sewered PF system is most advantageous in flat areas that would necessitate deep excavation and pumping stations for conventional sewerage.

Figure 7 · 1 Alternative Designs for Pour-flush Toilets (millimeters)

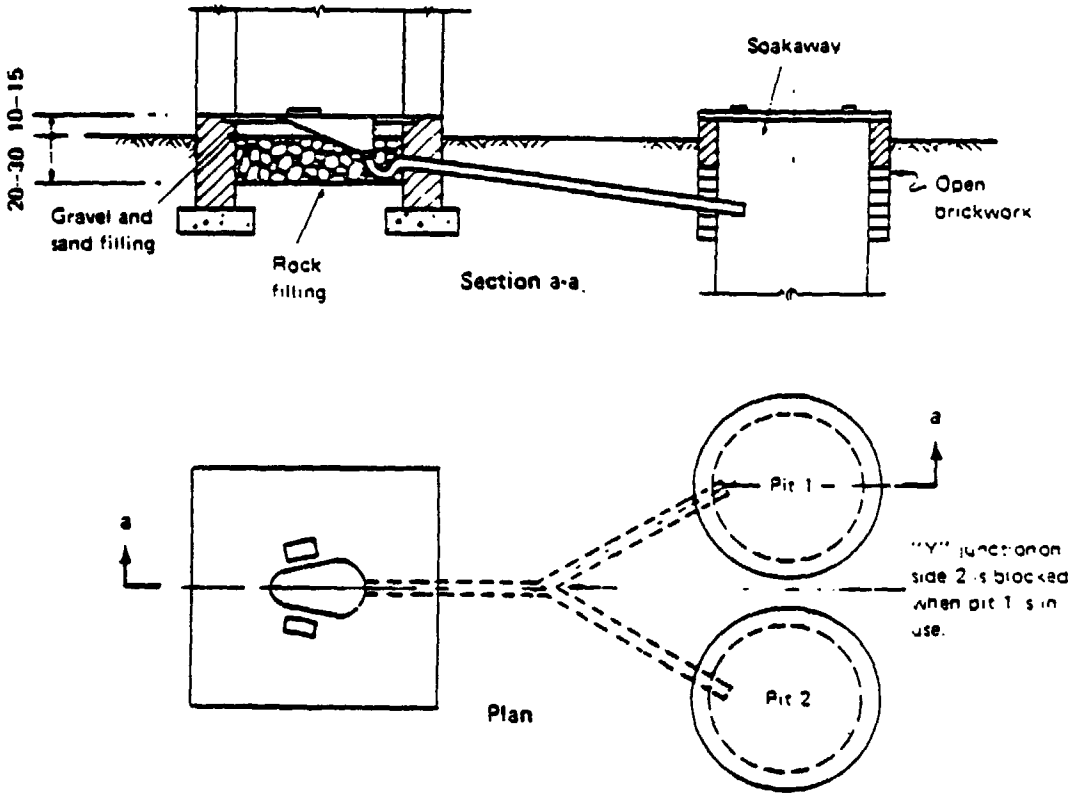

Offset pit design

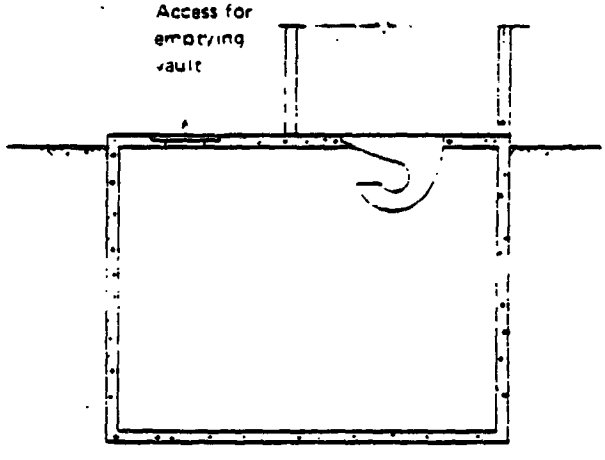

Direct discharge design

Note: In the offset pit design the pit s[illegible] adjacent at site of "Y" junction if only one pit is installed

Figure 7-2 Pour-flush Toilet – Septic-tank Systems

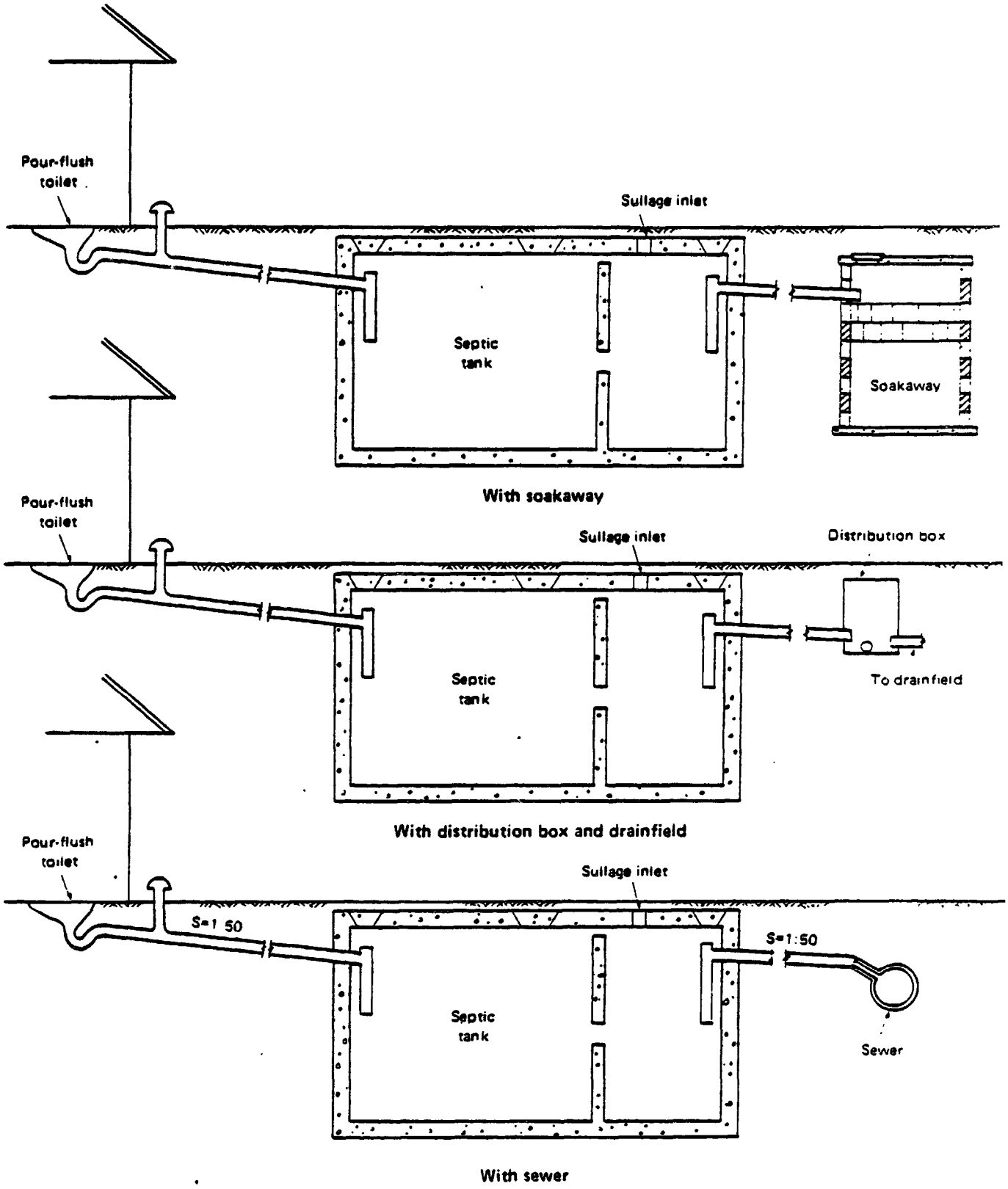

S, slope.

Note See chapter 14 for details of septic tanks, soakaways, and drainfields.

CHAPTER 8

AQUAPRIVIES

There are three types of aquaprivies: the simple or conventional aquaprivy, the self-topping or sullage aquaprivy, and the sewered aquaprivy. The second and third types are simple modifications of the first type designed to accept sullage, which the first type cannot.

The conventional aquaprivy toilet (Figure 8-1) consists essentially of a squatting plate situated immediately above a small septic tank that discharges its effluent to an adjacent soakaway. The squatting plate has an integral drop pipe, in diameter 100 to 150 millimeters, the bottom of which is 10 to 15 centimeters below the water level in the tank. In this manner a simple water seal is formed between the squatting plate and the tank contents. In order to maintain this water seal, which is necessary to prevent fly and odor nuisance in the toilet, it is essential that the tank be completely watertight and the toilet user add sufficient water to the tank via the drop pipe to replace any losses. A superstructure is provided for privacy and a small vent pipe is normally incorporated in the design to expell the gases produced in the tank.

The excreta are deposited directly into the tank where they are decomposed anaerobically in the same manner as in a septic tank. There is, as with septic tanks, a gradual accumulation of sludge (approximately 0.03-0.04 cubic meter per user per year), which should be removed when the tank is two-thirds full of sludge. The tank volume is usually calculated on the basis of 0.12 cubic meter per user, with a minimum size of 1 cubic meter. Desludging is normally required every 2 to 3 years when the tank is two-thirds full of sludge. The liquid depth in the tank is normally 1.0 to 1.5 meters in household units; depths of up to 2 meters have been used in large communal aquaprivies.

The volume of excreta added to the aquaprivy tank is approximately 1.5 liters per capita daily, and the water used for "flushing" and maintenance of the water seal is about 4.5 liters per capita daily; thus the aquaprivy effluent flow is around 6 liters per capita daily. The soakaway should therefore be designed on this basis, although it is common to include a factor of safety so that the design flow would be, say, 8 liters per capita daily. The sidewall area of the soakaway should be calculated assuming an infiltration rate of 10 liters per square meter daily (see chapter 9).

Technical Appropriateness

Maintenance of the water seal has always been a problem with conventional aquaprivies, except in some Islamic communities where the water used for anal cleansing is sufficient to maintain the seal. Even there, however, it is necessary for the vault to remain watertight. In many other communities people are either unaware of the importance of maintaining the seal or they dislike being seen carrying water into the toilet. If the seal is not regularly maintained, there is intense odor release and fly and mosquito nuisance.

The conventional aquaprivy (Figure 8-1) suffers a major disadvantage in practice the water seal is rarely maintained. As a consequence it cannot be recommended as a viable sanitation technology option. Although the problem of water-seal maintenance may be overcome in both the sullage and sewered aquaprivies as shown by Figures 8-2 and 8-3, and in spite of the evidence that these two systems have had success (notably in Zambia), the basic design of the aquaprivy system is questionable because of the expensive watertight tank needed to maintain the water seal. Experience has shown that the water seal may not always be maintained (usually because of failure or inadequacy of the water supply), so that the system has a relatively high risk of intermittent malfunction.

As shown in Figure 8-2, the sullage aquaprivy is operationally equivalent to either a VIP latrine (or ROEC) with an entirely separate soakage pit for sullage disposal or a PF latrine with a completely offset pit that can also be used for sullage disposal. The latter alternatives cost less than the sullage aquaprivy and in fact are superior because of their reduced risks of odor and fly nuisance and operational malfunctions. The PF toilet has a much more reliable water seal, which does not require a watertight pit, can be located inside the house, and is more easily upgraded to a cistern-flush toilet.

The logic of the sewered aquaprivy system is similarly questionable. An aquaprivy is sewered not because of any need to transport excreta along sewers, but as a method of sullage disposal in areas where the soil cannot accept any or all of the sullage produced. As shown in Figure 8-3, the sewered aquaprivy can be considered as functionally equivalent to a sewered PF toilet (chapter 7). The sewered PF toilet is the superior system for the reasons noted above; it is also marginally cheaper.

Thus aquaprivy systems ordinarily cannot be recommended as a viable sanitation option since they can be replaced by technically superior systems at lower cost. One important exception to this, however, is found in areas where the common anal cleansing materials, such as maize cobs, mud balls, and the like, would clog the water seals of PF toilets. In such cases the improved design shown in Figure 8-4 should be used.

Self-topping or Sullage Aquaprivy

The self-topping or sullage aquaprivy was developed to overcome the problem of maintenance of the water seal. In this simple modification of the conventional system with all the household sullage added to the tank; the water seal is thus readily maintained and the sullage is conveniently disposed of. Although the sullage can be added to the tank via the drop pipe, it is more common, and for the user more convenient, for it to be added from either a sink inside or immediately outside the toilet or from one located in an adjacent sanitation block. Naturally, as the volume of water entering and leaving the aquaprivy tank is increased by the addition of sullage, the soakage pit capacity must be increased to absorb a larger flow. Sullage aquaprivies cannot, therefore, be used in areas where the soil is not suitable for soakways or where the housing density of water usage is too high to permit

subsurface percolation for effluent disposal, unless the aquaprivy tank can be connected to a sewer system. Since all but the smallest solids are retained in the aquaprivy tank, the sewers can be of small diameter and laid at the nominal gradients necessary to ensure a velocity of around 0.3 meter per second rather than the self-cleansing velocity of 1 meter per second required in conventional sewers transporting raw sewage. Commonly 100- to 150-millimeter pipes are used at a fall of 1 in 150 to 300. Substantial economies in sewer and excavation costs are thus possible, and sewered aquaprivy systems are therefore considerably less expensive than conventional sewerage systems.

Tank Design

The principal modification to the standard aquaprivy tank is the addition of a sullage compartment provided to avoid hydraulic disturbance of the settled excreta in the main part of the tank. The invert of the pipe connecting the two compartments is a nominal 30 to 50 millimeters below the invest of the effluent pipe from the sullage compartment (which leads to the soakage pit or sewer), so that the sullage flow can be used to maintain the water seal in the main compartment, but is unable to resuspend the settled excreta. Since the proportion of excreta in the effluent is considerably less than that in the effluent from conventionally designed aquaprivy tanks, the soakge pit can be smaller as the infiltration rate of the effluent (now mostly sullage) is greater, approximately 30 to 50 liters per cubic meter of sidewall area per day. Thus sewers may not be required as soakage pits can be used for much larger wastewater flows.

The tank volume is calculated to provide 0.12 cubic meter per user in the settling compartment, which should have a minimum size of 1.0 cubic meter. The sullage compartment should have a volume of about 0.5 cubic meter.

Material and Labor Requirements

The aquaprivy vault may be constructed of brick, concrete, or concrete block and must be water-proofed with a stiff mortar. The smaller units may be prefabricated of plastic, if economically feasible.

Self-help labor is suitable for excavation work, but the vault construction requires skilled bricklayers.

Complementary Investments

Aquaprivies require sullage piping to the vault and effluent piping with either an on-site infiltration facility (drainfield, soakage pit, or the like) or off-site sewerage (small-bore or conventional sewers).

Water Requirements

Water required to maintain the water seal depends on local climatic conditions. In the sullage aquaprivy, the amount of sullage water discharged to the privy is sufficient to maintain the water seal, provided all sullage

water is drained to the vault. In practice this means that wherever sullage water is used to irrigate a garden, self-topping aquaprivies are not recommended unless water is piped to the house or yard--or the users are educated well enough to maintain the water seal.

Maintenance Requirements

Maintenance is simple. The aquaprivy should be kept clean and the vault desludged at 2-to-3-year intervals. An adequate supply of water is necessary for "flushing" and to maintain the water seal.

Factors Affecting Suitability

Only self-topping aquaprivies should be used and only where a water seal is desired and users have traditionally used bulky anal cleansing materials which would clog a PF toilet. Water is required on-site (yard or house connection) to ensure that enough water is available to maintain water seal.

Health

Properly used and maintained, the self-topping aquaprivy provides health benefits similar to those offered by the cistern-flush toilet.

Costs

Costs of the self-topping aquaprivy can be expected to be higher than either latrines or PF toilets because both a pit and a percolation unit are needed. The range of construction cost may be $150 to $400. Maintenance costs would be minimal, though the cost of water could easily reach $5 or more pre year in water scarce areas. Added to this would be the cost of pit emptying every three years, unless the municipality provides this service free.

Potential for Upgrading

Self-topping aquaprivies can easily be upgraded to low-cost (small-bore sewers) sewerage in the manner described for upgrading PF toilets. Similarly, the squatting plate could be replaced by a cistern-flush unit discharging into the vault.

Potential for Resource Recovery

Material removed from the pit should be treated (aerobic composting) or stored for 12 months before use to lower health risk to an acceptable level.

Main Advantages and Disadvantages

The main advantages of the self-topping aquaprivy are:

(i) No danger of clogging by bulky anal cleansing material;

(ii) possible location inside the house;

(iii) no odor or fly and mosquito breeding;

(iv) minimal risks to health;

(v) low annual costs; and

(vi) potential for upgrading;

The main disadvantages are:

(i) relatively high costs for on-site disposal;

(ii) high level of skill required for construction;

(iii) pit emptying requires some municipal involvement; and

(iv) small but nevertheless significant amounts of water required.

Figure 8 - 1. Conventional Aquaprivy (millimeters)

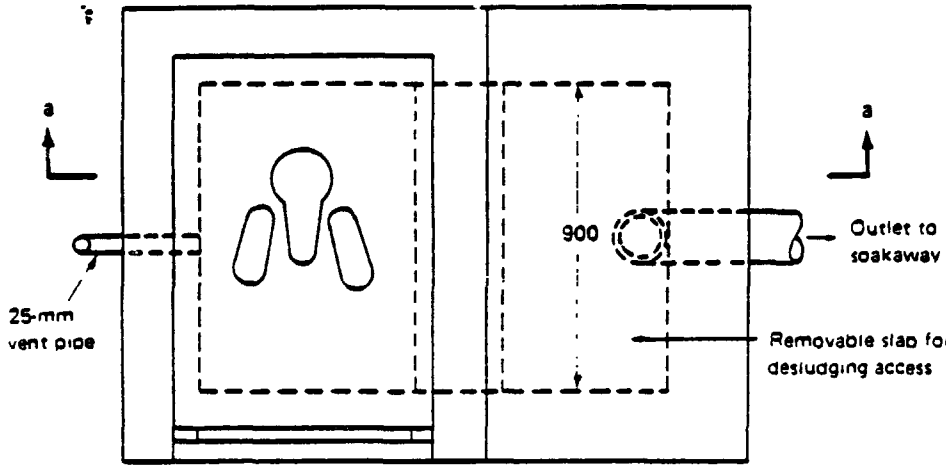

Plan

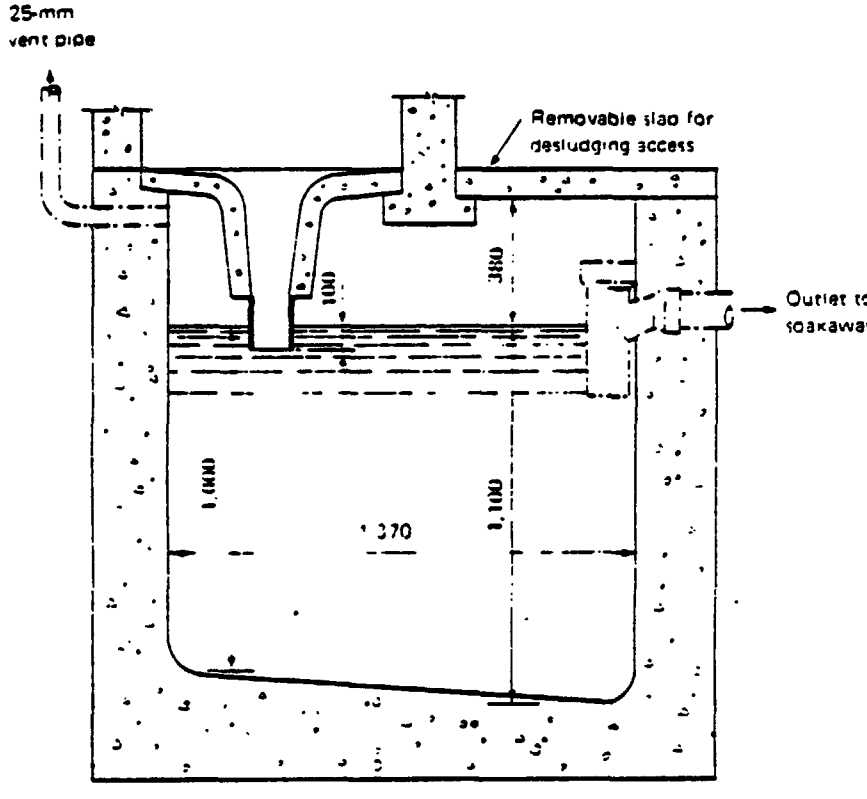

Section a-a

Source Adapted from Wagner and Lanoix (1953)

Figure 8 – 2. Formal Equivalence of Sullage Aquaprivy to Ventilated Improved Pit Latrine with Separate Sullage Soakaway or to Pour-flush Toilet

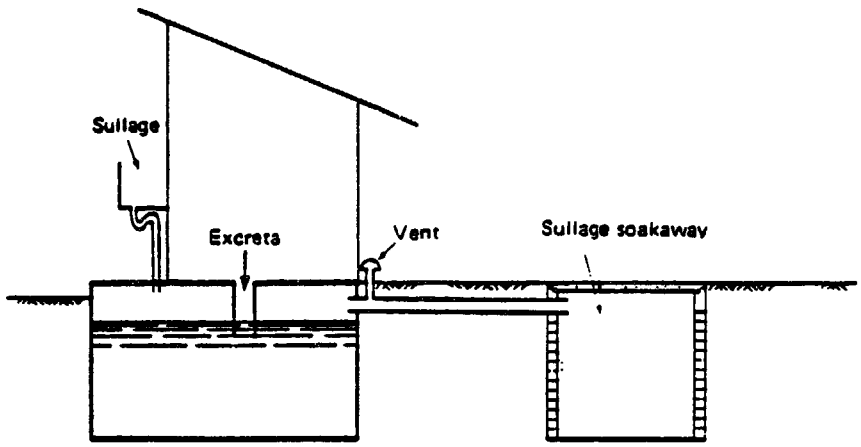

Aquaprivy

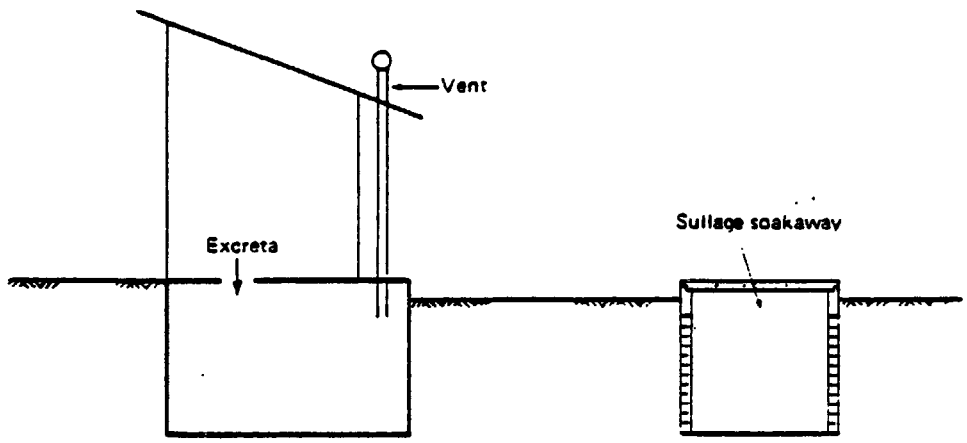

Ventilated improved pit latrine with separate sullage soakaway

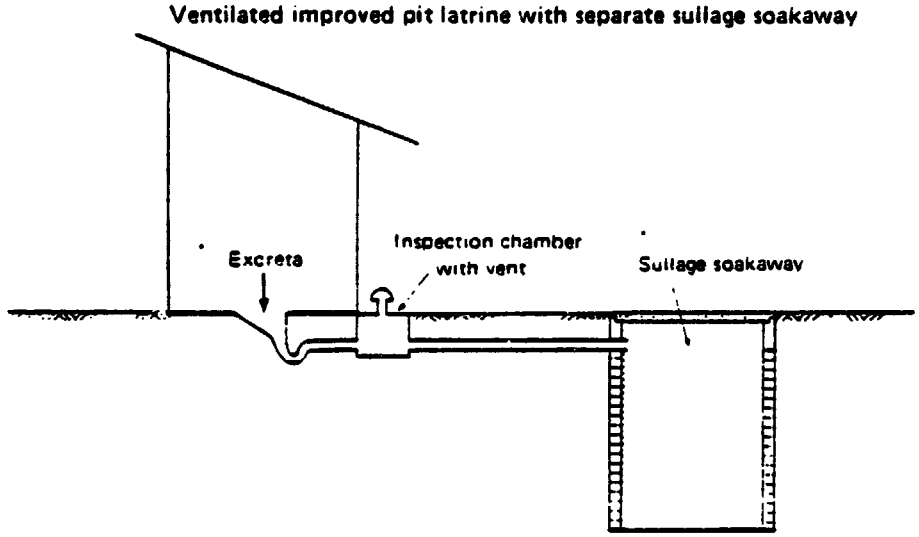

Pour-flush toilet

Figure 8 –3. Formal Equivalence of Sewered Aquaprivy to Sewered Pour-flush Toilet

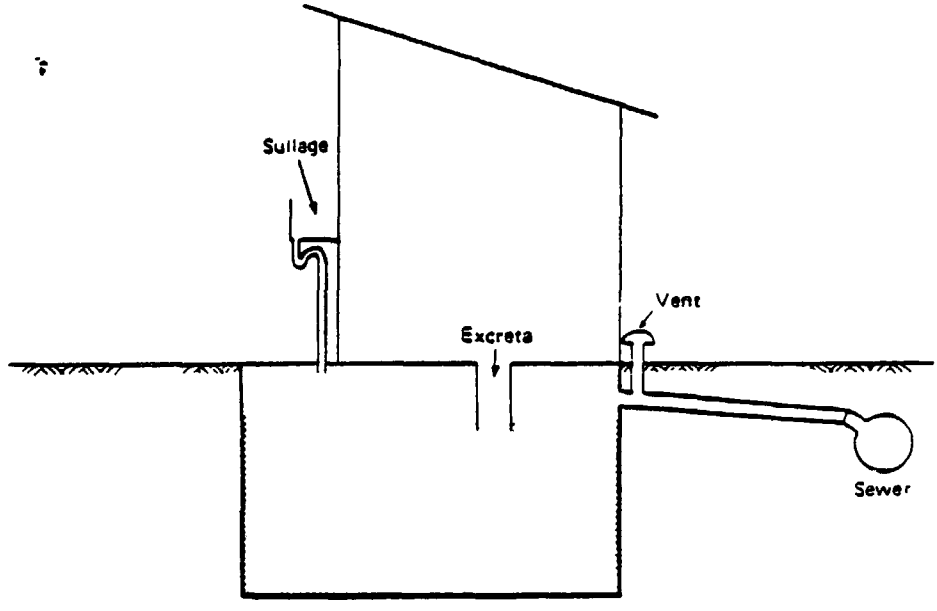

Sewered aquaprivy

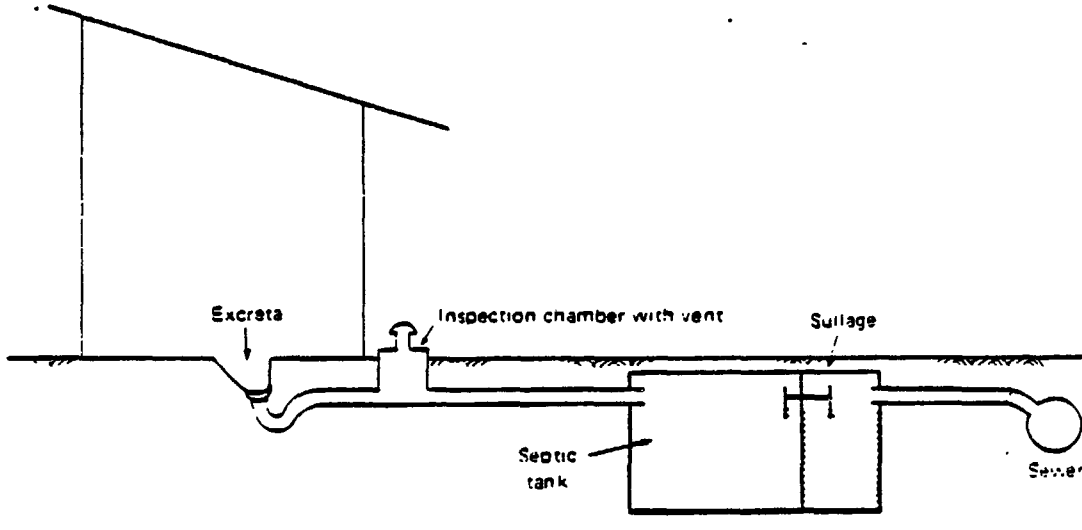

Sewered pour-flush toilet

Figure 8-4. Improved Sewered Aquaprivy with Sullage Disposal

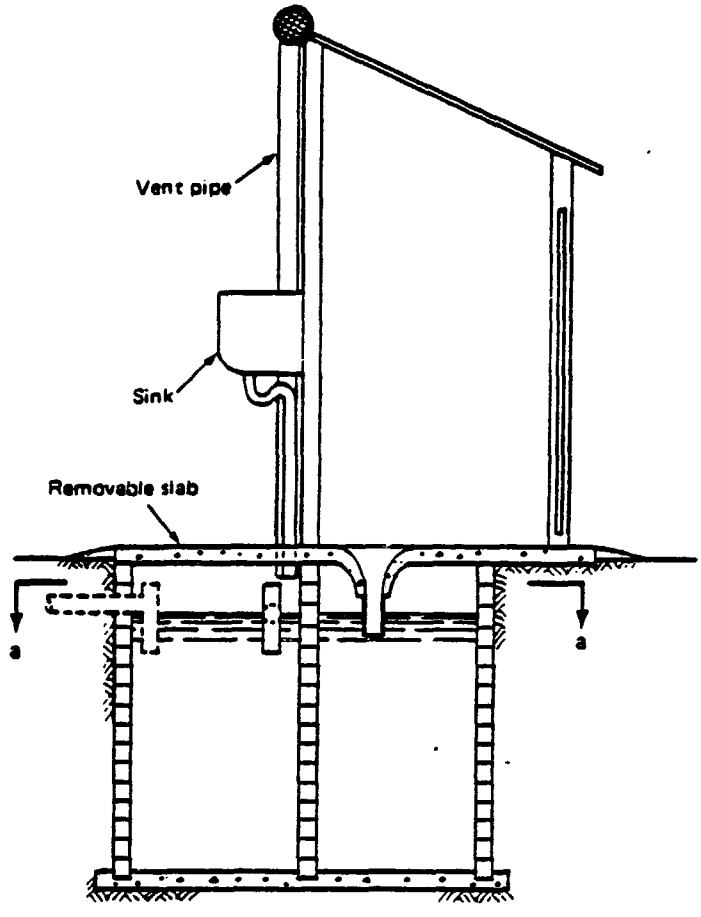

Section b-b

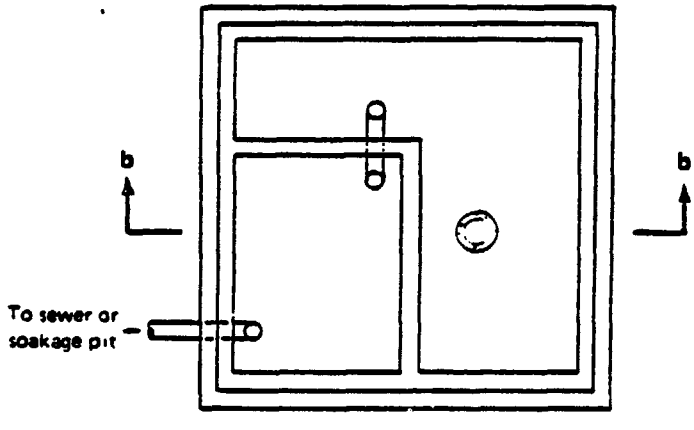

Plan/section a-a

CHAPTER 9

SEPTIC TANKS, SOAKAWAYS, AND DRAINFIELDS

Septic tanks are rectangular chambers, usually sited just below ground level, that receive both excreta and flushwater from flush toilets and all other household wastewater. The mean hydraulic retention time in the tank is usually 1 to 3 days. During this time the solids settle to the bottom of the tank where they are digested anaerobically, and a thick layer of scum is formed at the surface. Although digestion of the settled solids is reasonably effective, some sludge accumulates and the tank must be desludged at regular intervals, usually once every 1 to 5 years. The effluent from septic tanks is, from a health point of view, as dangerous as raw sewage and so is ordinarily discharged to soakaways or leaching fields; it should not be discharged to surface drains or water courses without further treatment. Although septic tanks are most commonly used to treat the sewage from individual households, they can be used as a communal facility for populations up to about 300.

A two-compartment septic tank (Figure 9-1) is now generally preferred to one with only a single compartment because the suspended solids concentration in its effluent is considerably lower. The first compartment is usually twice the size of the second. The liquid depth is 1 to 2 meters and the overall length to breadth ratio is 2 or 3 to 1. Experience has shown that in order to provide sufficiently quiescent conditions for effective sedimentation of the sewage solids, the liquid retention time should be at least 24 hours. Two-thirds of the tank volume is normally reserved for the storage of accumulated sludge and scum, so that the size of the septic tank should be based on 3 day's retention at start-up; this ensures that there is at least 1 day retention just prior to each desludging operation. Sludge accumulates at a rate of 0.03 to 0.04 cubic meter per person yearly; thus, knowing the number of users, the interval between successive desludging operations (which are required when the tank is one-third full of sludge) is readily calculated.

Figure 9-2 shows a variety of alternate designs, including an experimental septic tank in which an anaerobic upflow filter is substituted for subsurface systems for effluent disposal. Reports of initial research findings are promising. With 12- to 19-millimeter medium, intermittent flows of 40 to 60 liters per day, and after 90 days maturing, BOD solids removal comparable to or better than those for primary sewage treatment were maintained for 18 months. Further pilot studies may result in general application of this method.

Effluent Disposal

Subsurface disposal into soakaway pits or irrigation in drainfield trenches (soakaways) is the most common method of disposal of the effluent. The soil must be sufficiently permeable; in impermeable soils either evapotranspiration beds or upflow filters can be used, although there is little

operational experience with either of these systems. For large flows, waste stabilization ponds may be more suitable.

Drainfield design. The tank effluent is discharged directly to a soakaway (Figure 9-3) or, with larger flows or less permeable soils, to a number of drainage trenches connected in series (Figure 9-4). Each trench consists of open-joint agricultural drainage tiles of 100-millimeter diameter laid on a 1-meter depth of rock fill (20-millimeter to 50-millimeter grading) The effluent infiltrates into the soil surrounding the trench, the sidewalls of which are smeared and partially clogged during excavation. Further clogging of the effluent-soil interface results from slating (hydration) and swelling of the soil particles, from physical movement of fine solids in the effluent into the interface, from chemical deflocculation of clay particles when the effluent water has more sodium than the original interstitial groundwater, and from the formation of an organic mat made up of bacterial slimes feeding upon nutrients in the effluent. This means that the life of a drainfield is limited. Provision must therefore be made to set aside land for use as a future replacement drainfield. Soil percolation tests should be used to determine qualitatively whether or not the soil is sufficiently permeable. The infiltration should not be estimated solely from percolation test results, however, because these merely indicate the infiltration rate of clean water into virgin soil. The infiltration rate that should be used in drainfield design is the rate at which septic tank effluent can infiltrate the soil surface that has become partially clogged with sewage solids (which form an interface between the soil and the drainage trench). This rate of infiltration has been shown to be within the range of 10 to 30 liters per square meter of sidewall area per day for a wide range of soil types. The bottom of the trench is not considered to have any infiltrative capacity since it quickly becomes completely clogged with sewage solids. The trench length required is calculated from the equation:

$$L = \frac{NQ}{2DI}$$

where L = trench length, meters;
N = number of users;
Q = wastewater flow, liters per capita daily;
D = effective depth of trench, meters; and
I = design infiltration rate, liters per square meter daily.

The factor 2 is introduced because the trench has 2 sides. The design infiltration rate for soakaways or drainfields should be taken as 10 liters per square meter daily, unless a more accurate figure is known from local experience.

Soil percolation tests. The soil must have a sufficient percolative capacity. This is determined by conducting percolation tests. A satisfactory field procedure is to drill at least three 150-millimeter-diameter test holes 0-5 meters deep across the proposed drainfield. These are filled with water and left overnight so that the soil becomes saturated; on the following day, they are filled to a depth of 300 millimeters. After 30 and 90 minutes the

water levels are measured; the soil is considered to have sufficient percolative capacity if the level in each hole has dropped 15 millimeters in this period of 1 hour.

Location of Septic Tanks and Drainfields

Septic tanks and drainfields should not be located too close to buildings and sources of water or to trees whose growing roots may damage them. Table 9-1 gives general guidelines for location in the form of minimum distances from various features.

Table 9-1: Minimum Distance Requirements for Septic Tanks and Soakaways /a in Common Well-developed Soils

Item	Septic tank (meters)	Soakaway (meters)
Buildings	1.5	3.0
Property boundaries	1.5	1.5
Wells	10.0 /a	10.0 /a
Streams	7.5	30.0
Cuts or embankments	7.5	30.0
Water pipes	3.0	3.0
Paths	1.5	1.5
Large trees	3.0	3.0

Source: Adapted from Cotteral and Norris (1969).

a. Up to 30 meters for sands and gravels; larger values for jointed or fissured rocks. As noted above, drainfields clog up and must be taken out of service periodically to permit their recovery. This is ordinarily done by adding a second drainfield, operating it to the point of refusal, and diverting the flow back to the first one. Alternatively, intermittent discharge of the septic tank effluent will tend to keep the drainfield aerobic and thus increase its operating life. Another alternative to drainfield clogging is an evapotranspiration bed, the area and planting of which is designed from local climatic and agronomic data, particularly irrigation experience (see Figure 9-5).

Technical Appropriateness

Septic tanks of the conventional design described above are indicated only for houses that have both an in-house water supply and sufficient land for effluent disposal. These two constraints effectively limit the responsible use of septic tanks to low-density urban areas. In such areas they are a very acceptable form of sanitation. It is all too common, however, to see septic tanks provided in medium-density areas where the effluent, unable to infiltrate into the soil, is discharged either onto the ground surface, where it ponds, or into street gutters or storm drains; in these cases it causes odor nuisance and encourages mosquito breeding and is a health hazard.

It is possible to alter the design of the septic tank to make it more suitable for use in medium-density areas (up to approximately 200 people per hectare).[8] One design modification is the provision of three compartments (see Figure 9-2); toilet wastes only are discharged into the first compartment and sullage directly into the third; the second compartment provides additional and more quiescent settling for fecal solids. This arrangement avoids excessive dilution of the toilet wastes with sullage. This increases retention time and reduces the hydraulic disturbance in the first and second compartments, minimizing the resuspension of settled excreta and solids carryover into the second compartment. The third compartment acts as a sullage settlement chamber before the effluent is discharged into the drainfield. The first compartment should be designed on the basis of 0.15 cubic meter per user, so that desludging is required approximately every 2 years. The second and third compartments should be sized to provide 1 day retention time in each. Since the effluent from the third compartment contains very few fecal solids (which are predominantly responsible for the clogging of drainag trenches receiving conventionally designed septic tank effluents), the infiltration rate of the effluent is much higher, approximately 30 to 60 liters pe square meter daily. The trench length is correspondingly smaller and thus septic tanks with soakaways become technically feasible, and the need for sewerage obviated, at higher housing densities than is possible with conventionally designed septic tanks. If low-volume cistern-flush (or PF) toilets and other water saving fixtures are installed, it is possible to use septic tanks and soakaways at even greater housing densities, perhaps as high as 300 people per hectare.

Maintenance Requirements

In order to provide the minimum 24-hour detention time in the first compartment required for proper operation, septic tanks should be inspected periodically to ensure that neither scum particles nor suspended solids are being carried out with the effluent. In any case tanks must be desludged at regular intervals. For example, the 0.04 cubic meter per capita yearly accumulation rate used for designing a septic tank for ten people with a working volume of 1 meter wide, 3 meters long, 2 meters deep, and 1/3 of the volume to provide for sludge and scum accumulation will result in a pumping interval of 5 years.

Factors Affecting Suitability

The main physical factors that affect the suitability of septic tanks are low soil permeability, restricted space for drainage fields, high water service levels, and proximity of wells that supply drinking water.

Health Aspects

In most cases, enteric bacteria do not survive more than 10 meters of travel through soil. Greater travel distances have been observed, but these have been through sandy, gravelly, or fissured overburden. Therefore, if the downfield is adequate, no health hazard should result.

Costs

Septic tanks and leaching fields are among the most expensive forms of household waste disposal. Capital operation and maintenance costs have been found to exceed costs of conventional sewers and sewage treatment by 50 percent in the United States and to be about equal to the costs of sewerage, including conventional activated sludge with effluent chlorination and sludge incineration, in Japan (see volume I of this series). It must be noted, however, that these costs are derived from installations where high water consumption prevails and none of the improvements recommended herein had been applied.

Upgradability

PF or cistern-flush toilets with septic tank systems are readily connected to small-bore or conventional sewerage systems. The conversion is often required when water use and/or population density exceed limiting characteristics of the soils in which the drainfields are placed.

Resource Recovery

The three-compartment septic tank was specifically designed and operated for recovery of fertilizer from human and animal excreta and is particularly popular in rural areas of China. Excreta and the required flushwater are discharged via a PF bowl (or, alternatively, via a straight or curved chute as in an ROEC) into the first compartment of the septic tank. The retention time in this chamber is 10 to 20 days. The contents of the first compartment overflow into the second, to which may also be added animal excreta (especially pig) from an adjacent animal pen. The retention time in the second compartment is also 10 to 20 days; allowance has to be made for the additional daily volume of animal wastes. The third compartment, which receives the effluent from the second, is a treated excreta storage tank with a holding capacity of 20 to 30 days. The contents of the third compartment are removed for use as liquid fertilizer on agricultural crops; alternatively they could be used to fertilize fish ponds.

Experience in rural China has shown that the three-stage septic tank system reduces fecal coliform counts to below 1,000 per 100 millimeters and achieves an Ascaris ova removal efficiency approaching 100 percent (with at most 5 percent viability of the few remaining ova). The contents of the third tank are reported to be relatively odorless, light brown to yellow in color, and with only finely divided suspended solids.

During the 40- to 60-day retention time in the septic tank a very high degree of excreted pathogen removal occurs; nonetheless, the final product will contain significant numbers of pathogenic bacteria, viruses, and helminths. There is no doubt that the agricultural reuse of excreta treated in the three-stage septic tank is superior to the direct use of untreated excreta. It is, however, questionable whether in many parts of the world such treatment would be considered sufficient, and whether the

reuse of only partially treated excreta is socially acceptable or indeed advisable from the health point of view. The three-stage septic tank system is only applicable to rural areas where there is a tradition of using liquid excreta for crop or fish pond fertilization. In such areas its pathogen removal efficiency can be considerably increased by providing 30 days' retention in each compartment with a corresponding increase in vault volumes. The three-stage septic tank design shown in Figure 9-2, which provides for increased retention and destruction and for introduction of sullage to the third chamber, is a modification of the proven Chinese design.

Main Advantages and Disadvantages

The main advantage of septic tank systems is their flexibility and adaptability to a wide variety of individual household waste disposal requirements. Their major disadvantages include large space requirements, a reasonably high degree of user attention, and high costs.

Figure 9 –1. Schematic of Conventional Septic Tank (millimeters)

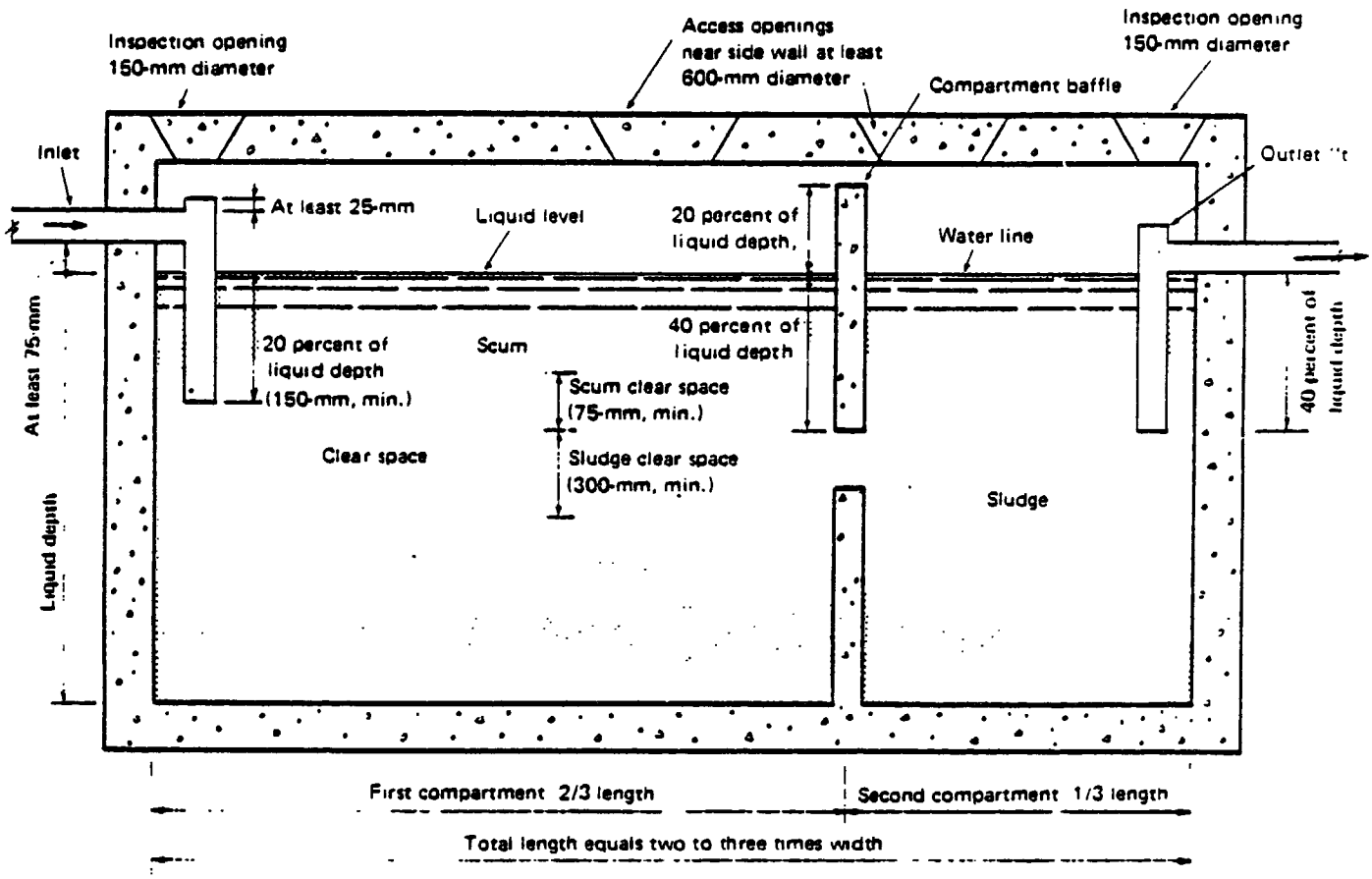

Note If vent is not placed as shown on figures 13–2, 3, and 4, septic tank must be provided with a vent.

Figure 9 –2. Alternative Septic Tank Designs (millimeters)

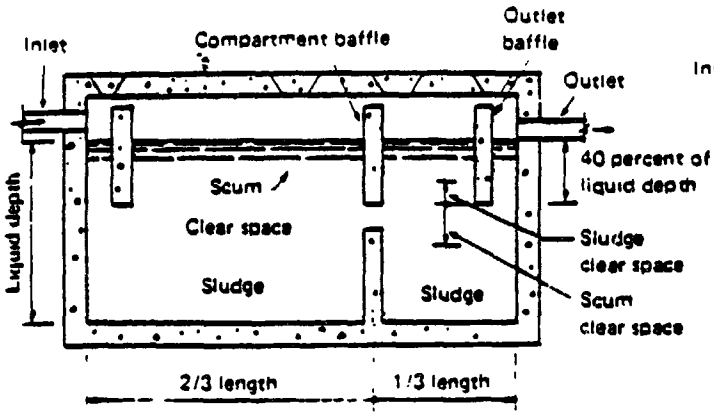

Conventional two-compartment septic tank with baffle walls

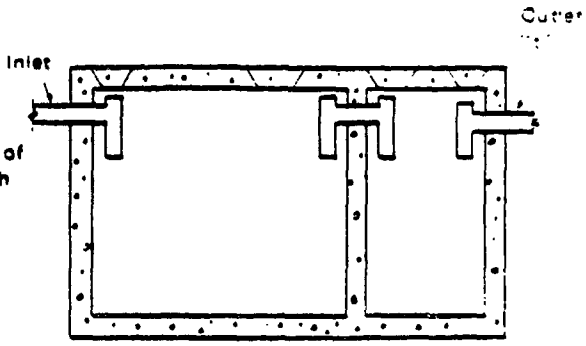

Conventional two-compartment septic tank with inlet connector and outlet "t"

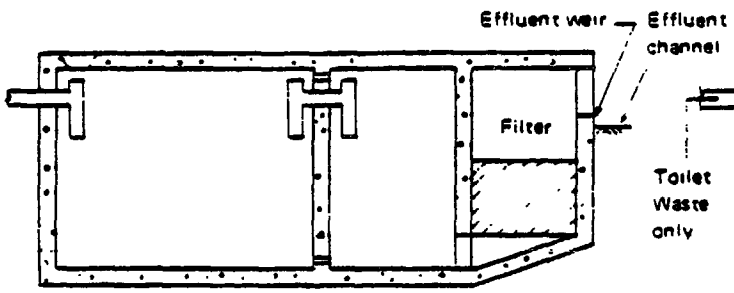

Two-compartment septic tank with upflow filter

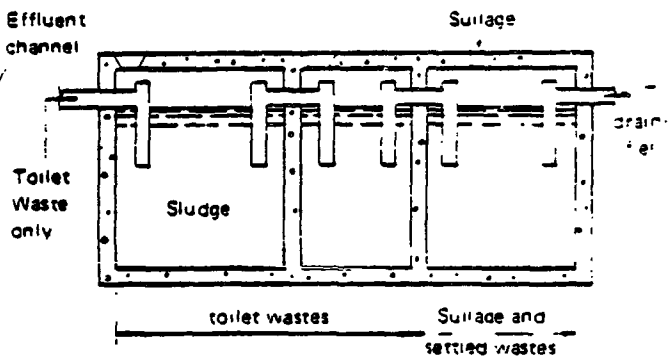

Three-compartment septic tank

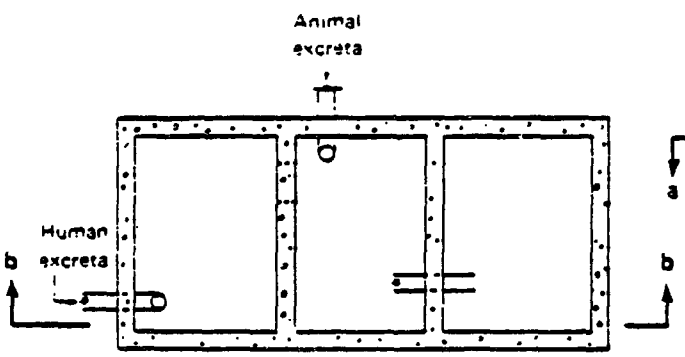

Section a-a

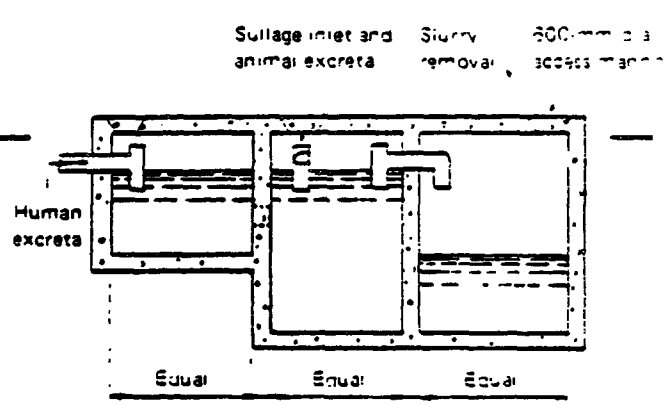

Section b-b

Three-compartment septic tank for resource recovery

Figure 9 -3 Schematic of Soakaway
(millimeters)

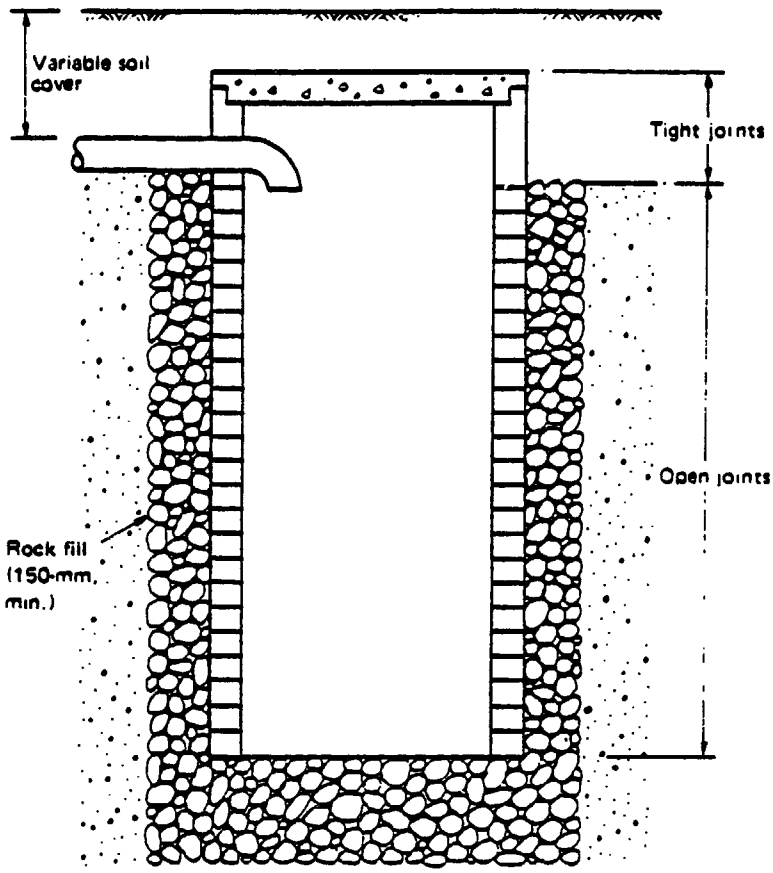

Source: Adapted from Wagner and Lanc (1958).

Figure 9 -4. Drainfield for Septic-tank Effluent (millimeters)

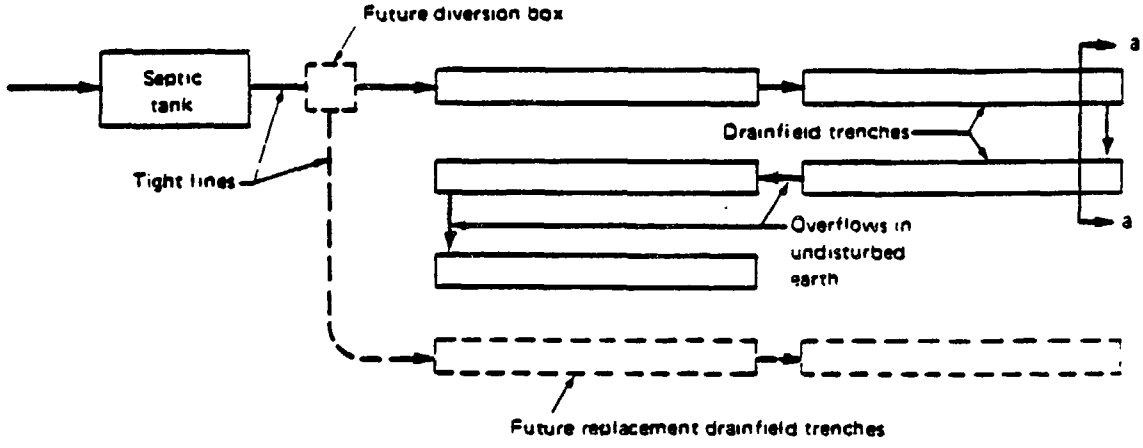

Plan

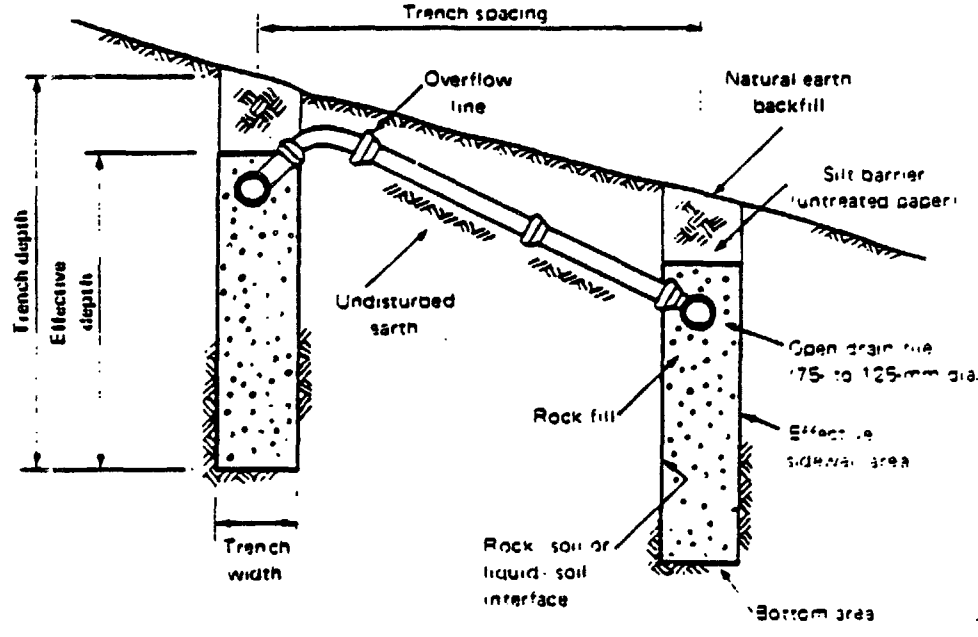

Section a-a

Source Adapted from Cotteral and Norris (1969)

Figure 9–5. Evapotranspiration Mounds (millimeters)

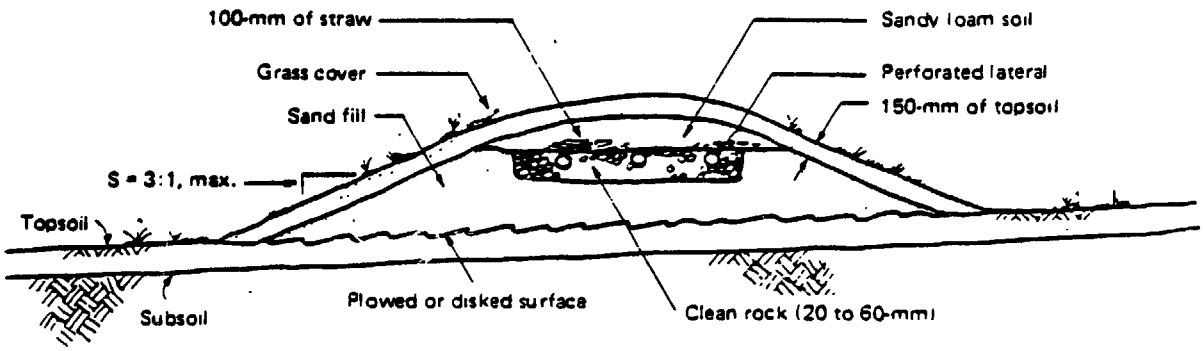

Cross section a-a

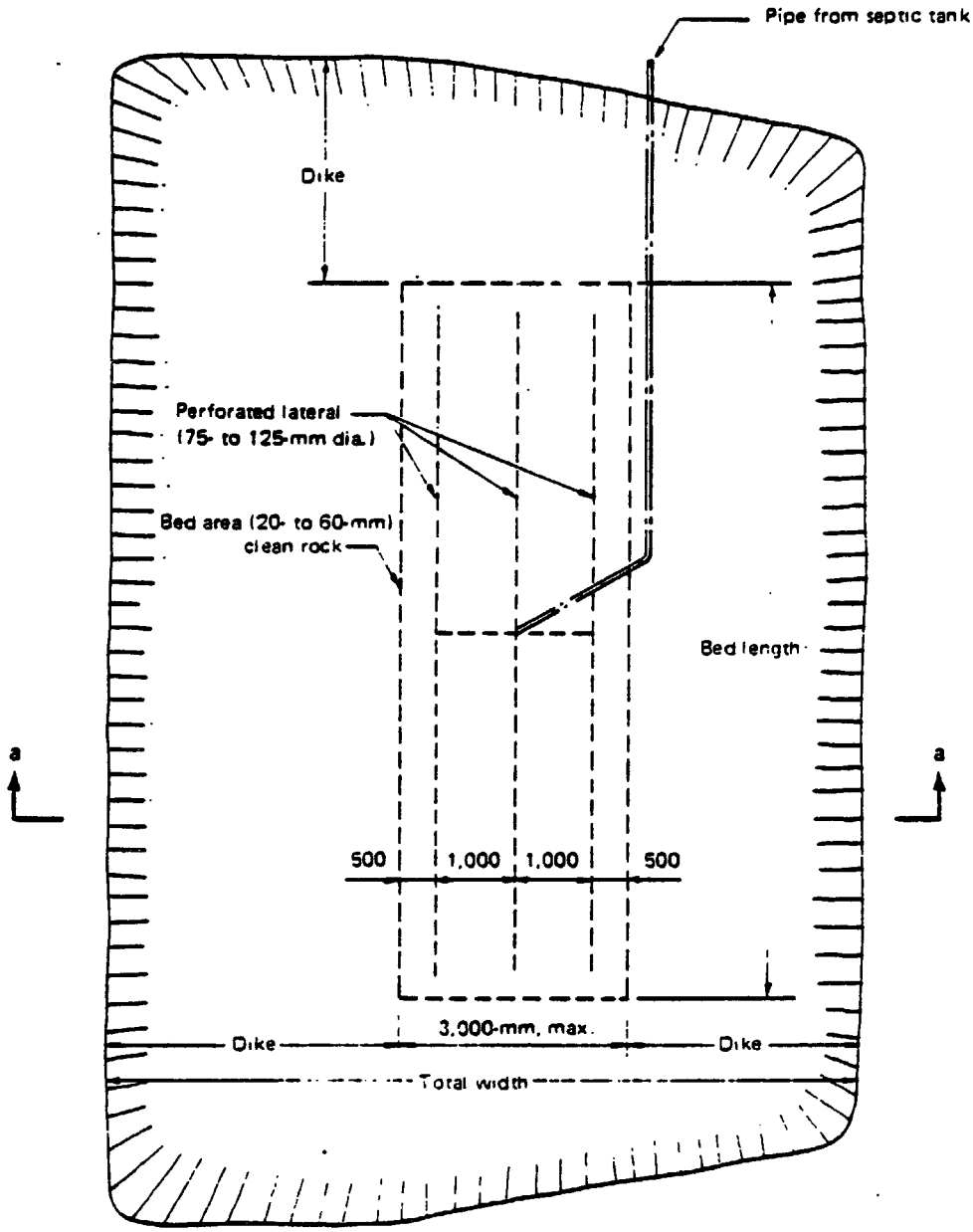

Plan/top view

S, slopes

Note: An acceptable alternative to a mound is an evapotranspiration bed, which has the same construction but is built in a natural or manmade depression not subject to flooding and has a more or less level surface.

CHAPTER 10

COMMUNAL SANITATION FACILITIES

Advantages and Disadvantages

Communal sanitation facilities provide a minimum service level ranging from sanitation only as shown in Figure 3-1 to a combined latrine/ablution laundry unit such as that illustrated in Figure 10-1. Their principal advantage is their low cost. Because they serve many people they are substantially cheaper on a per capita basis than individual household facilities. They have many disadvantages, however, and the decision to install communal facilities is one that should never be taken lightly. The basic problem with a communal facility is that it appears to belong to no one so that there is very little commitment by individual users to keep it clean and operating properly. Once a toilet compartment is fouled, the next user may have no choice but to foul it further. As a result many communal toilet blocks are in a very unhygienic state. To avoid this it is essential to provide one or more well-paid attendants to keep the facilities in good operational order, and lighting and a water supply must also be provided. It is also essential that the employers of the attendants (often the municipality should regularly inspect the facilities to make sure that they are being properly maintained.

Technical Appropriateness

There are four technical disadvantages of communal sanitation facilities. First, there is the difficult question of privacy. A community's requirements for privacy must be clearly understood and respected. Cultural attitudes toward defecation vary, but generally it is regarded as a private personal act. Thus, at the least, each toilet within the communal block should be designed as a separate compartment and provided with a door that can be bolted; this may appear obvious, but there are many public toilet blocks that merely contain a row of holes with no internal partitioning whatsoever. In some societies, however, privacy is not so highly coveted. It is clear that questions of privacy must be discussed with the community by the program behavioral scientist. Second, there is the problem of defecation at night and during illness and wet or cold weather. If the communal block is not lit, it may not be used at night. In any case it is surely unreasonable to expect even fit adults--let along the young, the old, or the infirm--to walk 100 meters or more in the middle of the night or in torrential rain, often along a dark or muddy street or alleyway. There must be some general provision (including guidance to the community) for the disposal of nocturnal and "bad weather" excreta.

If it is accepted that the provision of individual household facilities (of whatever type) is the ultimate objective of sanitation program planning, then the third disadvantage of communal facilities is that they cannot be upgraded. This means that they should be designed with eventual

replacement by individual household facilities in mind. In this connection it is sensible to tie the provision of sanitation facilities to residential upgrading programs; this is especially advisable in the case of slum improvement schemes.

The fourth disadvantage of communal facilities is their space requirement. Depending upon the type of excreta disposal and the service level provided (see below), this space may vary from 5 to 10 percent of the total land space.

Communal Facilities Design

There are basically two approaches to the design of communal sanitation blocks. The first is to have a truly public system in which a user can enter any toilet compartment not in use at the time. The second approach is to provide within the communal block cubicles for the exclusive use of one household. This system, essentially a compromise between public and private facilities, has been tried with considerable success in some parts of India; experience has shown that each household will zealously guard its own cubicle and keep it clean but that maintenance of the communal parts (e.g., the passageways and particularly the effluent disposal system) can cause organizational problems. This system is undoubtedly superior to the truly public system, but it is also more expensive since a greater number (depending on the average household size) of toilet compartments is needed. The advantage to the municipality is that it is relatively easy to levy rental fees and collect payment from each household using the facility.

A third approach to the design of communal facilities is to provide a sanitation block of the first type but reserved for the exclusive use of a large kinship group. This has been tried with some success in the densely populated old city of Ibadan, Nigeria. Individual households that belong to a patrilineal kinship group, locally termed an "extended family," of between 100 and 1,000 members are located on the same piece of land, which is held in communal ownership by the kinship group. Each kinship group is (or is planned to be) provided with a "comfort station," essentially a communal sanitation block with toilets, showers, and laundry facilities. Part of the construction cost is borne by the extended family and part by the government; the family is responsible for maintenance and also for paying the water and electricity charges. Clearly this approach to the provision of communal sanitation facilities can only work under suitable social conditions. The success of the Ibadan comfort stations has probably been due more to their social setting than to their technical design.

Number of toilet compartments required

In the truly public communal sanitation block, the best available evidence suggests that one toilet compartment can serve twenty-five to fifty people. Although it seems prudent to take a design figure of twenty-five users per compartment, it must be stressed that there are hardly any good field data available to support such a figure. For example, the OXFAM

disaster sanitation unit, designed for a population of 500 and provided with twenty squatting plates, is able to serve a population of 1,000 to 1,500 (i.e., fifty to seventy-five users per squatting plate or two to three times the design figure) in the "bustee" areas of urban Bangladesh. Yet, how well it serves that number of people--in the sense of the time spent in queuing, especially at "peak" periods--has not been reported.

The toilet compartments should be arranged in separate blocks for men and women. Urinals should be provided in the men's block and the total number of urinals and compartments in the men's block should be the same as the number of compartments in the women's.

Location

In high density areas (over 1,000 people per hectare), the number of people that can be served by one communal sanitation block (usually 200 to 500 people) will normally determine the required number and location of communal facilities, rather than the distance people can be expected to walk to them. For example, if the population density is such that only one communal block is required per hectare, then the maximum distance that people would be required to walk is around 100 meters, which is a 1.2 minute walk at a speed of 5 kilometers per hour.

Toilet type

The ideal type of toilet for installation in a communal sanitation facility is a PF or low-volume cistern-flush toilet. Water use may amount to 15-20 liters per capita daily. Other types of toilets have been used, for example, aquaprivies in the Ibadan comfort stations where communal facilities serving individual household compartments or large kinship groups have been successful.

Shower and laundry facilities

If shower and clothes washing facilities are not available in individual households, these should be provided at the communal sanitation blocks (for approximately one to fifty people in warm climates); the water requirement for showering is 15 to 25 liters per capita daily. Additionally, handbasins should be provided at the rate of one for ten people; water use may be estimated as 5 to 15 liters per capita daily. Both shower and handbasin water use may be considerably reduced by the provision of water-saving plumbing fixtures. In warm climates it is usually not necessary to provide hot water since the cold water storage tank will normally contain water warm enough for personal washing.

It may also be necessary to provide laundry facilities. The exact style of these facilities should conform to local preference. Approximately one washing tub should be provided for fifty people. Clothes drying lines may be required.

In communal facilities with compartments reserved for the exclusive use of one household, each compartment may contain a shower and handbasin in addition to the toilet if sufficient space is available. Whether it is necessary to provide a private laundry tub as well, rather than communal laundry facilities, is a decision best taken after discussion with the community.

Effluent disposal

Generally a low-cost sewerage system should be used but soakage pits for PF toilets and sullage water disposal to stormdrains have also been used successfully. If the toilets are of the cistern-flush type, a septic tank should be provided so that the sewers can be of small diameter and laid at flat gradients. The septic tank should follow the design described for sewered PF toilets in chapter 7. If the toilets are aquaprivies, a settlement tank is already included in the design and provision needs to be made for only a small tank to settle sullage. If the terrain is such that velocities of 1 meter per second can be obtained in the sewer without the need for excessive excavation or pumping, the sewerage system can be of the conventiona kind and the septic tank would no longer be necessary. In areas where communal sanitation blocks can be installed near a trunk sewer serving other parts of the town, they should of course be connected to it.

Figure 10–1. Schematic of a Communal Sanitation Facility

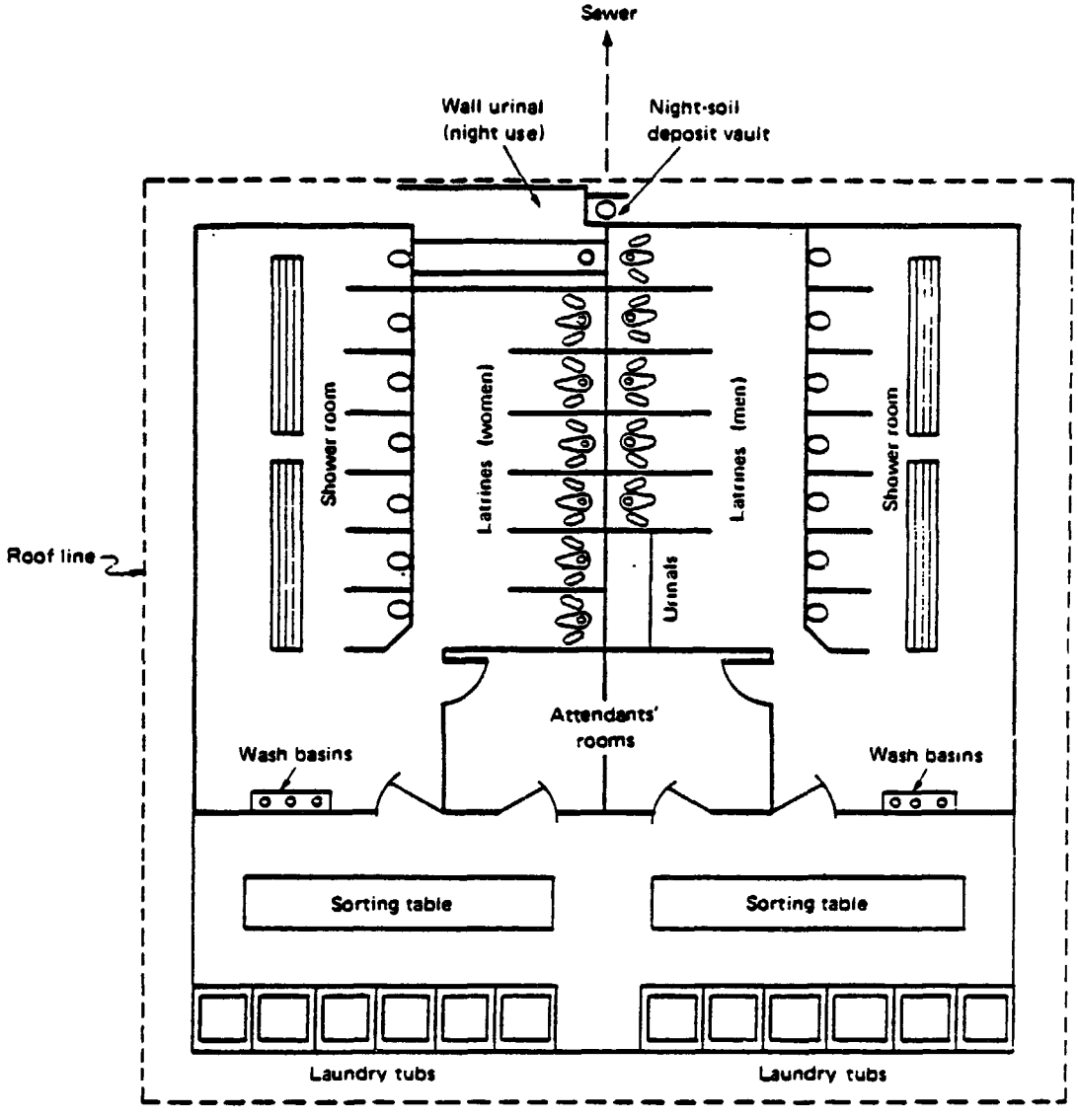

World Bank
Headquarters:
1818 H Street, N.W.
Washington, D.C. 20433, U.S.A.
Telephone: (202) 477-1234
Cable address: INTBAFRAD
WASHINGTONDC

European Office:
66, avenue d'Iéna
75116 Paris, France